JVC

SERVICE MANUAL

COMPACT COMPONENT SYSTEM

MX-J100

SP-MXJ100 CA-MXJ100 SP-MXJ100

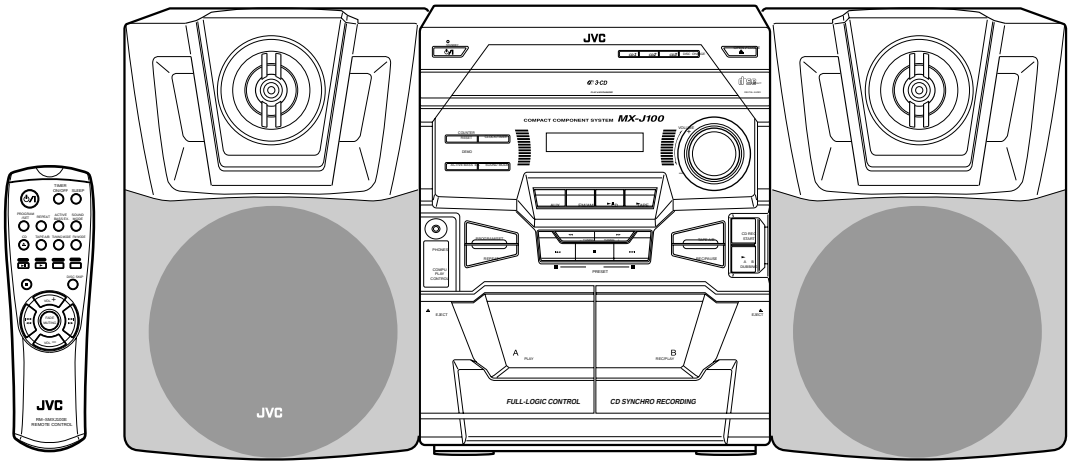

COMPACT disc DIGITAL AUDIO

Area Suffix	
B	U.K.
E	Continental Europe
EN	Northern Europe
EE	Russia
EV	Eastern Europe

Contents

Safety precautions ---------- 1-2
Important for laser products ---------- 1-3
Preventing static electricity ---------- 1-4
Disassembly method ---------- 1-5
Adjustment method ---------- 1-19
Flow of functional operation until TOC read ---------- 1-23
Maintenance of laser pickup ---------- 1-24
Replacement of laser pickup ---------- 1-24
Description of major ICs ---------- 1-25

COPYRIGHT © 2000 VICTOR COMPANY OF JAPAN, LTD.

No.20854
Aug. 2000

Safety Precautions

1. This design of this product contains special hardware and many circuits and components specially for safety purposes. For continued protection, no changes should be made to the original design unless authorized in writing by the manufacturer. Replacement parts must be identical to those used in the original circuits. Services should be performed by qualified personnel only.
2. Alterations of the design or circuitry of the product should not be made. Any design alterations of the product should not be made. Any design alterations or additions will void the manufacturer`s warranty and will further relieve the manufacture of responsibility for personal injury or property damage resulting therefrom.
3. Many electrical and mechanical parts in the products have special safety-related characteristics. These characteristics are often not evident from visual inspection nor can the protection afforded by them necessarily be obtained by using replacement components rated for higher voltage, wattage, etc. Replacement parts which have these special safety characteristics are identified in the Parts List of Service Manual. Electrical components having such features are identified by shading on the schematics and by (⚠) on the Parts List in the Service Manual. The use of a substitute replacement which does not have the same safety characteristics as the recommended replacement parts shown in the Parts List of Service Manual may create shock, fire, or other hazards.
4. The leads in the products are routed and dressed with ties, clamps, tubings, barriers and the like to be separated from live parts, high temperature parts, moving parts and/or sharp edges for the prevention of electric shock and fire hazard. When service is required, the original lead routing and dress should be observed, and it should be confirmed that they have been returned to normal, after re-assembling.
5. Leakage current check (Electrical shock hazard testing)
   After re-assembling the product, always perform an isolation check on the exposed metal parts of the product (antenna terminals, knobs, metal cabinet, screw heads, headphone jack, control shafts, etc.) to be sure the product is safe to operate without danger of electrical shock.
   Do not use a line isolation transformer during this check.
   - Plug the AC line cord directly into the AC outlet. Using a "Leakage Current Tester", measure the leakage current from each exposed metal parts of the cabinet , particularly any exposed metal part having a return path to the chassis, to a known good earth ground. Any leakage current must not exceed 0.5mA AC (r.m.s.)
   - Alternate check method
     Plug the AC line cord directly into the AC outlet. Use an AC voltmeter having 1,000 ohms per volt or more sensitivity in the following manner. Connect a 1,500Ω 10W resistor paralleled by a 0.15μF AC-type capacitor between an exposed metal part and a known good earth ground.
     Measure the AC voltage across the resistor with the AC voltmeter.
     Move the resistor connection to each exposed metal part, particularly any exposed metal part having a return path to the chassis, and measure the AC voltage across the resistor. Now, reverse the plug in the AC outlet and repeat each measurement. Voltage measured any must not exceed 0.75 V AC (r.m.s.). This corresponds to 0.5 mA AC (r.m.s.).

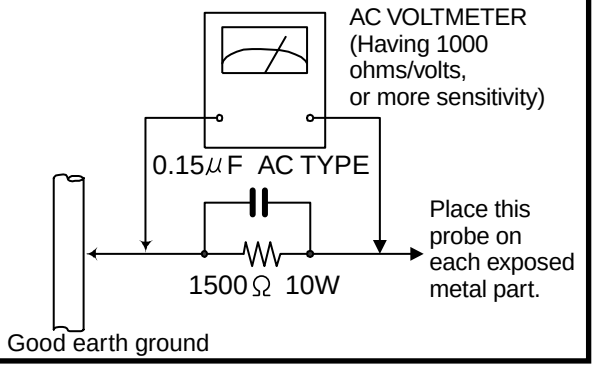

Warning

1. This equipment has been designed and manufactured to meet international safety standards.
2. It is the legal responsibility of the repairer to ensure that these safety standards are maintained.
3. Repairs must be made in accordance with the relevant safety standards.
4. It is essential that safety critical components are replaced by approved parts.
5. If mains voltage selector is provided, check setting for local voltage.

⚠ **CAUTION** **Burrs formed during molding may be left over on some parts of the chassis. Therefore, pay attention to such burrs in the case of preforming repair of this system.**

Important for laser products

1.CLASS 1 LASER PRODUCT

2.DANGER : Invisible laser radiation when open and inter lock failed or defeated. Avoid direct exposure to beam.

3.CAUTION : There are no serviceable parts inside the Laser Unit. Do not disassemble the Laser Unit. Replace the complete Laser Unit if it malfunctions.

4.CAUTION : The compact disc player uses invisible laserradiation and is equipped with safety switches whichprevent emission of radiation when the drawer is open and the safety interlocks have failed or are de feated. It is dangerous to defeat the safety switches.

5.CAUTION : If safety switches malfunction, the laser is able to function.

6.CAUTION : Use of controls, adjustments or performance of procedures other than those specified herein may result in hazardous radiation exposure.

⚠ ***CAUTION*** **Please use enough caution not to see the beam directly or touch it in case of an adjustment or operation check.**

VARNING : Osynlig laserstrålning är denna del är öppnad och spårren är urkopplad. Betrakta ej strålen.

VARO : Avattaessa ja suojalukitus ohitettaessa olet alttiina näkymättömälle lasersäteilylle.Älä katso säteeseen.

ADVARSEL : Usynlig laserstråling ved åbning , når sikkerhedsafbrydere er ude af funktion. Undgå udsættelse for stråling.

ADVARSEL : Usynlig laserstråling ved åpning,når sikkerhetsbryteren er avslott. unngå utsettelse for stråling.

REPRODUCTION OF LABELS

CLASSIFICATION LABEL, PLACED ON REAR ENCLOSURE

CLASS 1
LASER PRODUCT

WARNING LABEL, PLACED INSIDE THE UNIT

DANGER: Invisible laser radiation when open and interlock failed or defeated. AVOID DIRECT EXPOSURE TO BEAM. (e)

VARNING: Osynlig laser-strålning när denna del är öppnad och spärren är urkopplad. Betrakta ej strålen. (s)

ADVARSEL: Usynlig laser-stråling ved åbning, når sikkerhedsafbrydere er ude af funktion. Undgå udsæt-telse for stråling (d)

VARO: Avattaessa ja suo-jalukitus ohitettaessa olet alttiina näkymättömälle lasersäteilylle. Älä katso säteeseen. (f)

Preventing static electricity

1. Grounding to prevent damage by static electricity

Electrostatic discharge (ESD), which occurs when static electricity stored in the body, fabric, etc. is discharged, can destroy the laser diode in the traverse unit (optical pickup). Take care to prevent this when performing repairs.

2. About the earth processing for the destruction prevention by static electricity

In the equipment which uses optical pick-up (laser diode), optical pick-up is destroyed by the static electricity of the work environment.
Be careful to use proper grounding in the area where repairs are being performed.

2-1 Ground the workbench

Ground the workbench by laying conductive material (such as a conductive sheet) or an iron plate over it before placing the traverse unit (optical pickup) on it.

2-2 Ground yourself

Use an anti-static wrist strap to release any static electricity built up in your body.

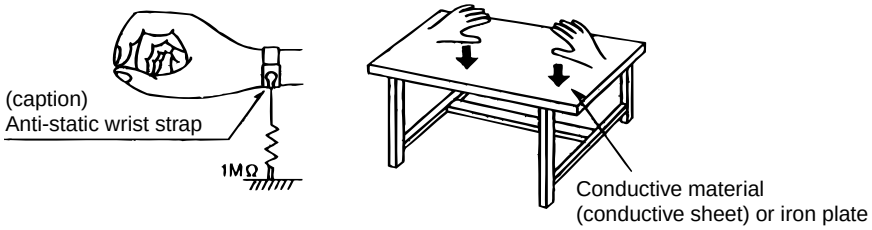

3. Handling the optical pickup

1. In order to maintain quality during transport and before installation, both sides of the laser diode on the replacement optical pickup are shorted. After replacement, return the shorted parts to their original condition. (Refer to the text.)

2. Do not use a tester to check the condition of the laser diode in the optical pickup. The tester's internal power source can easily destroy the laser diode.

4. Handling the traverse unit (optical pickup)

1. Do not subject the traverse unit (optical pickup) to strong shocks, as it is a sensitive, complex unit.

2. Cut off the shorted part of the flexible cable using nippers, etc. after replacing the optical pickup. For specific details, refer to the replacement procedure in the text. Remove the anti-static pin when replacing the traverse unit. Be careful not to take too long a time when attaching it to the connector.

3. Handle the flexible cable carefully as it may break when subjected to strong force.

4. It is not possible to adjust the semi-fixed resistor that adjusts the laser power. Do not turn it

Attention when CD mechanism assembly is decomposed

***Please refer to "Disassembly method" in the text for pick-up and how to detach the CD mechanism assembly.**

1. Remove the CD changer unit.
2. Remove the CD changer mechanism.
3. Solder is put up before the card wire is removed from the pickup unit connector on the CD mechanism assembly.
   (When the card wire is removed without putting up solder, the CD pick-up assembly might destroy.)
4. Please remove solder after connecting the card wire with the pickup unit connector when you install picking up in the substrate.

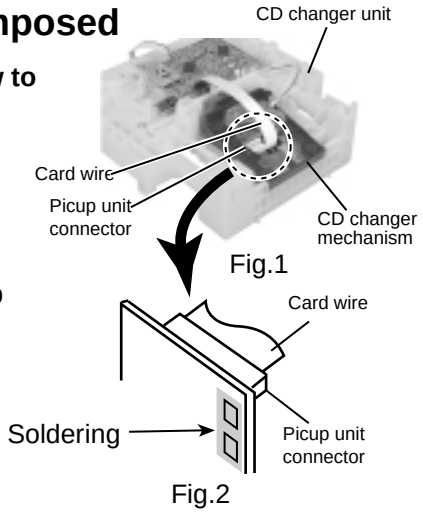

Disassembly method

<Main body>

■ Removing the top cover and the side covers (See Fig.1 to 3)

1. Remove the three screws **A** on the back of the body and the two screws **B** on both sides of the body.

2. Remove the top cover upward from behind.

3. Remove the two screws **C** attaching the side covers on the back of the body and the six screws **D** on both sides.

4. Slide the right and left covers backward and unhook the two hooks **a** in the lower part of the side covers as shown in Fig.2-2.

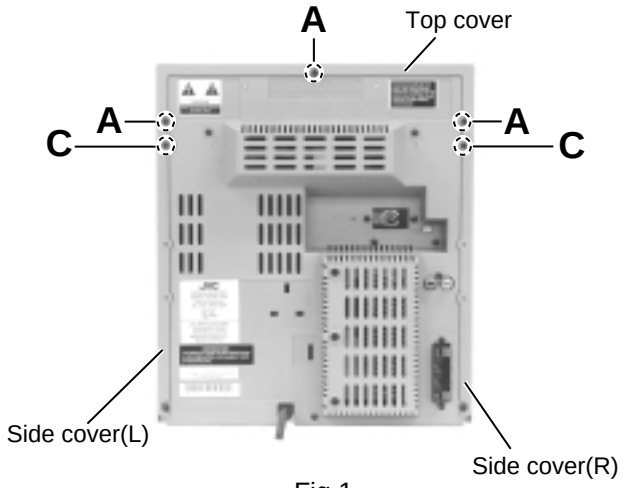

Fig.1

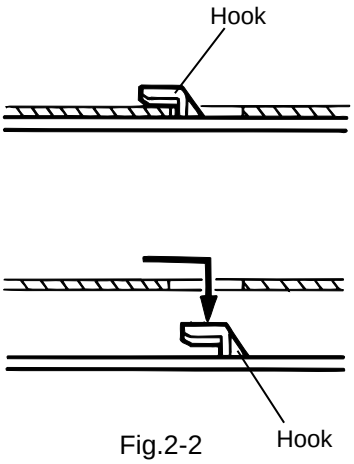

Fig.2-2

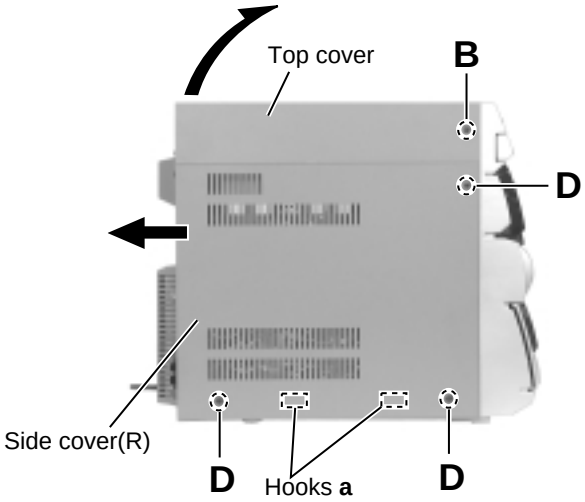

Fig.2

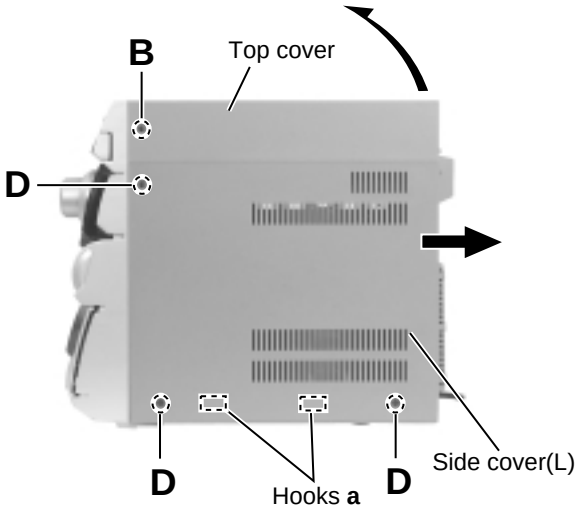

Fig.3

■Removing the CD Tray fitting (See Fig. 4 to 6)

- Prior to performing the following procedure, remove the top cover and the side covers.

ATTENTION: Be sure to remove the CD tray fitting before removing the CD changer unit.

1. Press the POWER button. Press the OPEN/CLOSE button to eject the CD tray.
2. Move the CD tray fitting upward and release the joint **b**.
3. Press the OPEN/CLOSE button to insert the tray.

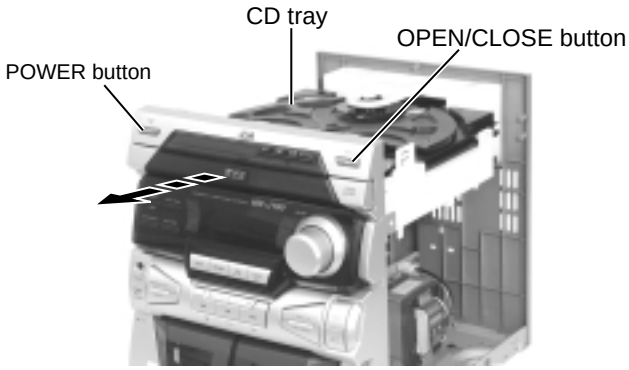

Fig.4

■Removing the CD Tray fitting (See Fig. 5 to 7)

- How to eject the CD tray without turning on power -

1. Turn the black loading pulley gear marked **c** from the back of the CD changer unit as shown in Fig.7 and draw the CD tray toward the front.
2. Move the CD tray fitting upward and release the joint **b**.
3. Push and insert the CD tray manually.

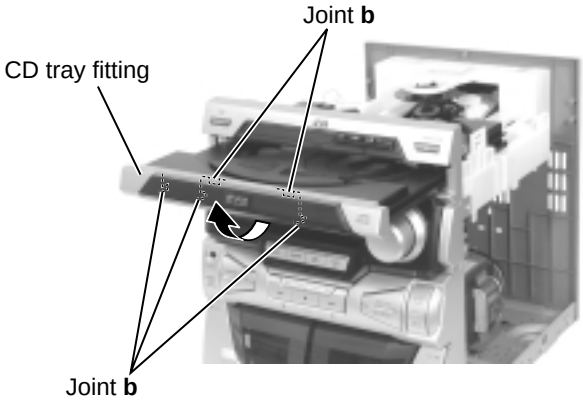

Fig.5

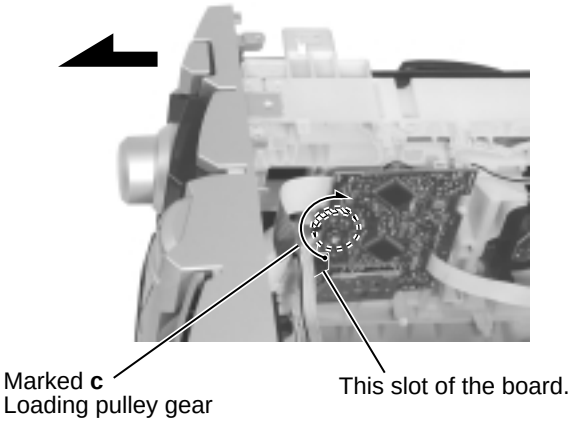

Fig.7

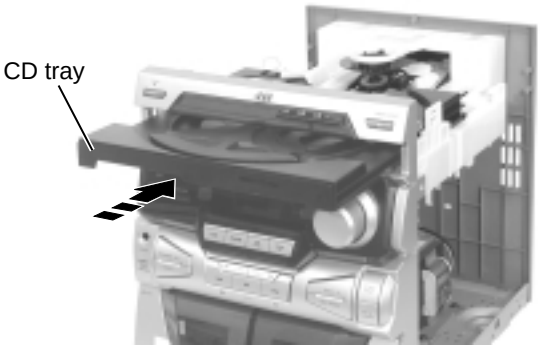

Fig.6

■Removing the CD changer unit (See Fig.8 to 10)

・Prior to performing the following procedure, remove the top cover, the side covers and the CD Tray fitting.

1. Disconnect the card wire from connector SCW1 of the CD servo board on the back of the CD changer unit.

2. Disconnect the harness from connector FW2 on the inner side of the mother(main) board in the body.

3. Remove the two screws **E** attaching the CD changer unit on the back of the body.

4. Draw the CD changer unit upward from behind while pulling the rear panel outward.

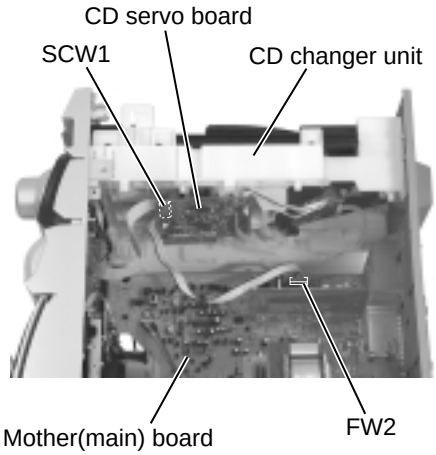

Fig.8

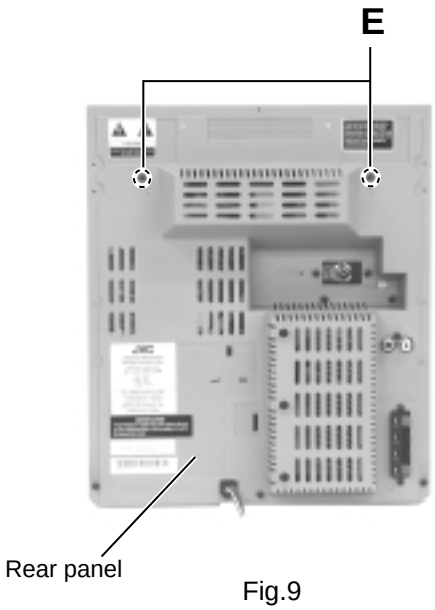

Fig.9

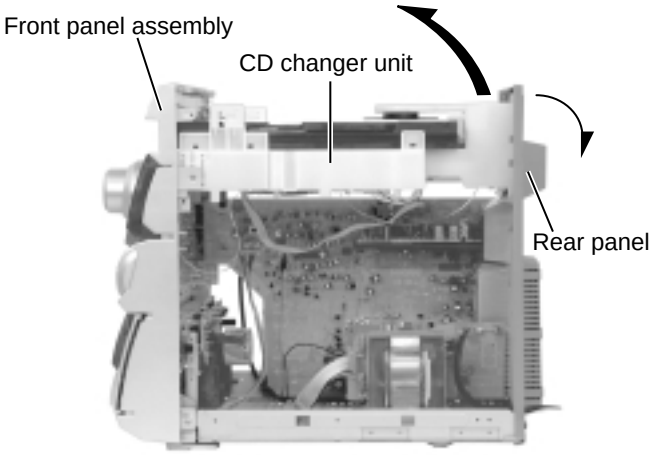

Fig.10

■Removing the front panel assembly (See Fig.11 to 13)

・Prior to performing the following procedure, remove the top cover, the side covers, the CD Tray fitting and the CD changer unit.

・There is no need to remove the rear panel.

1. Disconnect the harness from head wire connector DW1 and DW2 on the inner side of the mother (main) board in the body.

2. Disconnect the harness from connector HCW1 of the headphone board on the right side of the body.

3. Remove the three screws **F** attaching the front panel assembly on both sides of the body.
   Remove the screw **V** attaching the earth terminal extending from the front compartment.

4. Remove the screw **G** attaching the front panel assembly on the bottom of the body.

5. Release the two joints **d** on both sides and two joints **e** on the bottom of the body using a screwdriver. At the same time, disconnect the front compartment from connector CCW1 and CCW2 of the mother(main) board.

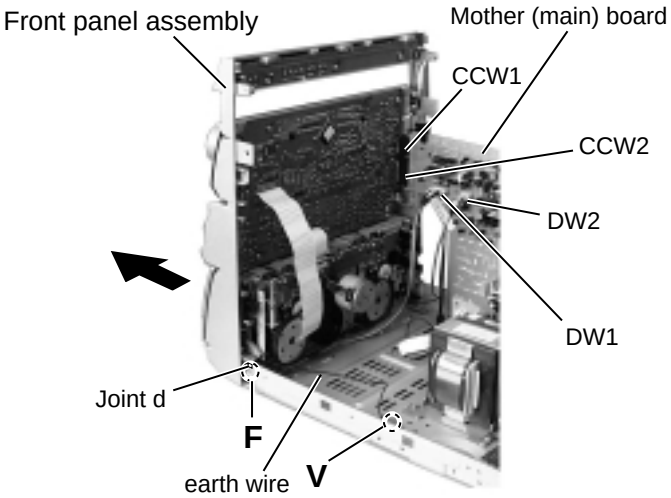

Fig.11

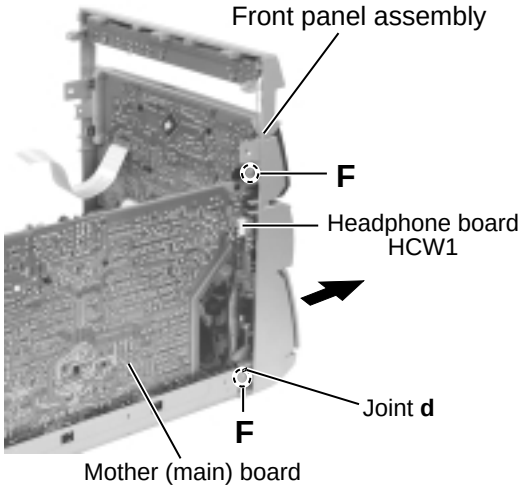

Fig.12

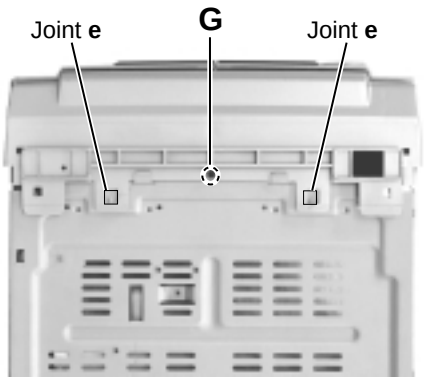

Fig.13

■Removing the rear panel (See Fig.14)

・Prior to performing the following procedure, remove the top cover, the side covers, the CD Tray fitting and the CD changer unit.

・There is no need to remove the front panel assembly.

1. Remove the seven screws **H** attaching the mother(main) board and the tuner board to the rear panel on the back of the body.

2. Remove the three screws **I** attaching the heat sink to the rear panel on the back of the body.

3. Remove the three screws **J** attaching the rear panel on the back of the body.

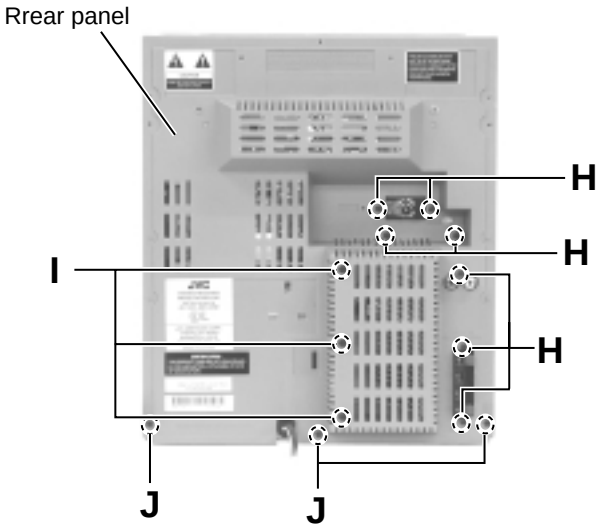

Fig.14

■Removing the mother(main) board (See Fig.15 and 16)

・Prior to performing the following procedure, remove the rear panel.

1. Disconnect the harness from connector HCW1 of the mother(main) board on the right side of the body. Release the harness from the clamp in the body.

2. Disconnect the harness from head wire connector DW1 and DW2 extending to the mother(main) board in the body.

3. Disconnect the harness from connector RCW1 of the power transformer.

4. Remove the screw **K** attaching the earth terminal to the base chassis.

5. Disconnect connector CCW1 and CCW2 connected to the mother(main) board from the front compartment (The mother(main)) board will be detached with the tuner board and the assembly.

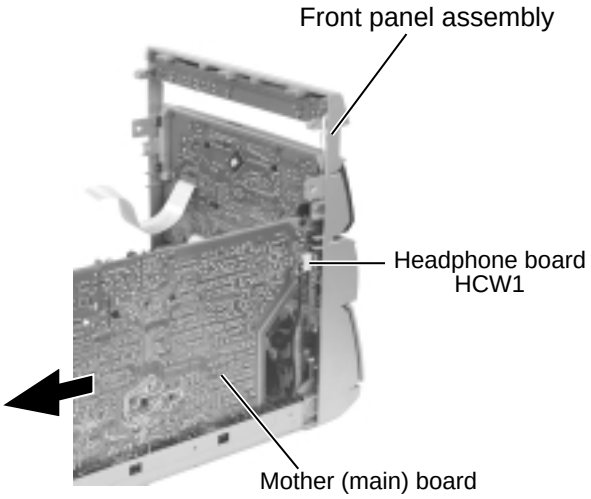

Fig.15

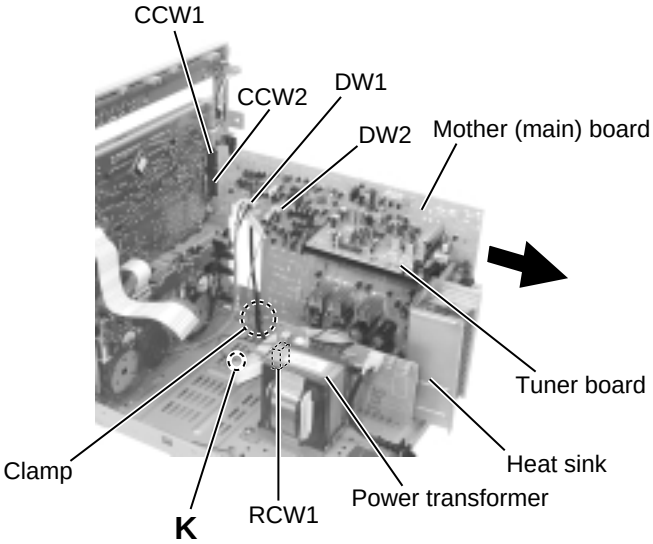

Fig.16

■Removing the heat sink
(See Fig.17 and 18)

・Prior to performing the following procedure, remove the mother(main) board.

1. Remove the three screws **L** attaching the heat sink cover plate.

2. Remove the two screws **M** attaching the power IC to the heat sink and the three screws **N** attaching the heat sink to the mother (main) board.

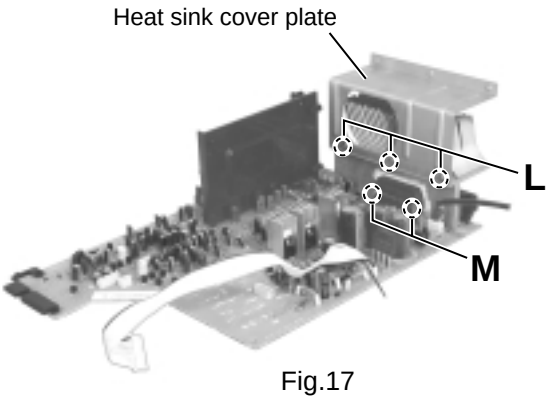

Fig.17

■Removing the tuner Board
(See Fig. 18 to 20)

・The tuner board can be removed even if the mother(main) board is attached.

1. Release the joint tab **f** of the tuner board holder and the mother(main) board, and disconnect connector FW1 connected to the mother(main) board. Remove the tuner board assembly (Refer to Fig.18).

2. Remove the screw **O** attaching the tuner board holder. Release the two tabs **g** outward and remove the tuner board from the holder.

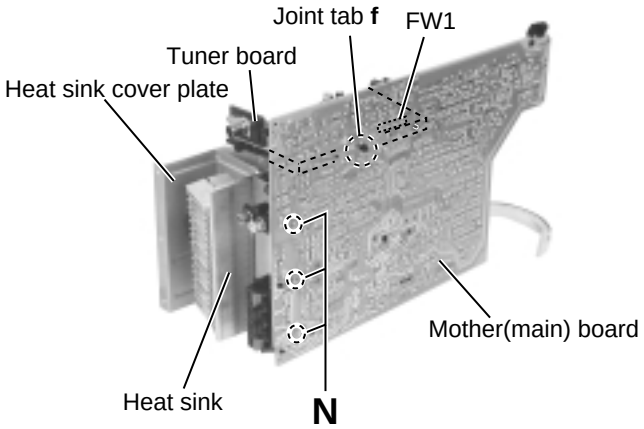

Fig.18

■Removing the power transformer
(See Fig .21)

・Prior to performing the following procedure, remove the top cover and the side covers.

1. Disconnect the power cord from connector RCW2 of the power transformer.

2. Disconnect the harness from connector RCW1 of the power transformer.

3. Remove the four screws **P** attaching the power transformer and the screw **Q** attaching the earth terminal.

ATTENTION: Prior to disconnecting the power cord from the body, remove the rear panel.

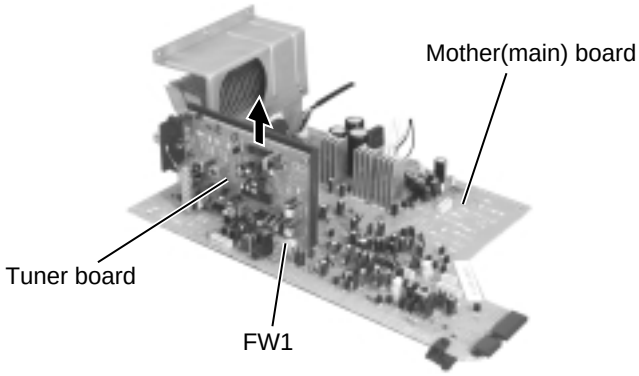

Fig.19

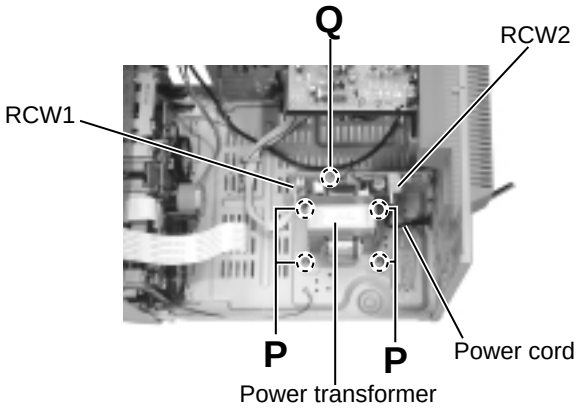

Fig.21

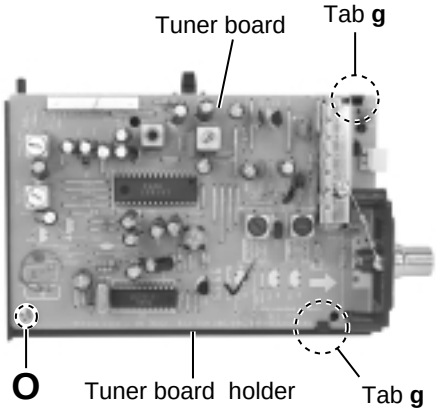

Fig.20

<Front panel assembly>

・Prior to performing the following procedure, remove the top cover, the side covers, the CD tray fitting and the front panel assembly.

■Removing the power / CD switch board (See Fig.22)

1. Remove the three screws **R** attaching the power / CD switch board and release the three tabs **h** outward.

2. Disconnect the harness from connector UCW2 of the power / CD switch board.

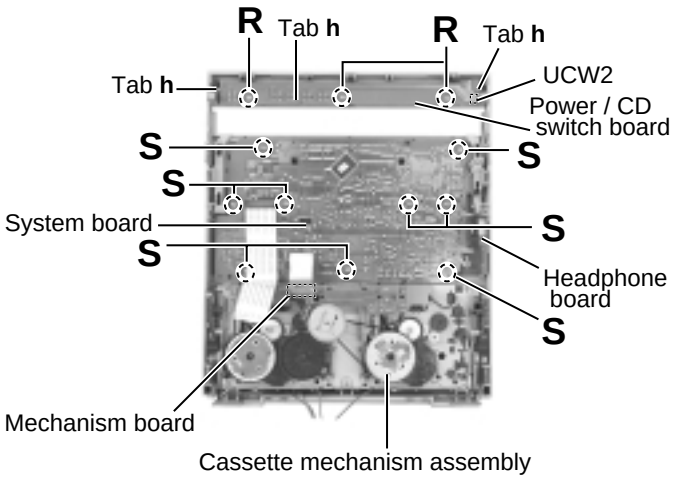

Fig.22

■Removing the system board (See Fig.22 and 23)

・Prior to performing the following procedure, remove the power / CD switch board.

1. Pull out the volume knob toward the front.

2. Disconnect the card wire from the mechanism board of the cassette mechanism assembly.

3. Remove the nine screws **S** attaching the system board.

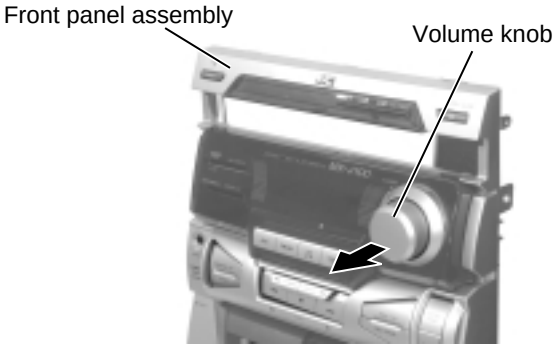

Fig.23

■Removing the headphone board (See Fig.24)

1. Remove the system board temporarily and remove the screw **T** attaching the headphone board. Pull out the headphone board.

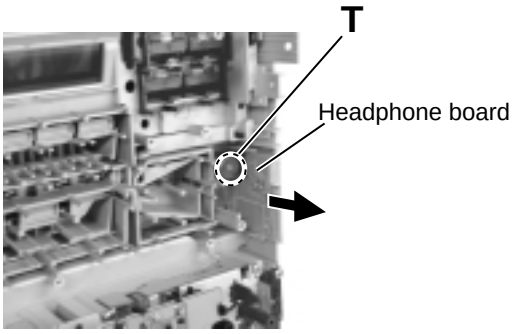

Fig.24

■Removing the cassette mechanism assembly (See Fig.25)

1. Disconnect the card wire from the mechanism board of the cassette mechanism assembly.

2. Remove the seven screws **U** attaching the cassette mechanism assembly.

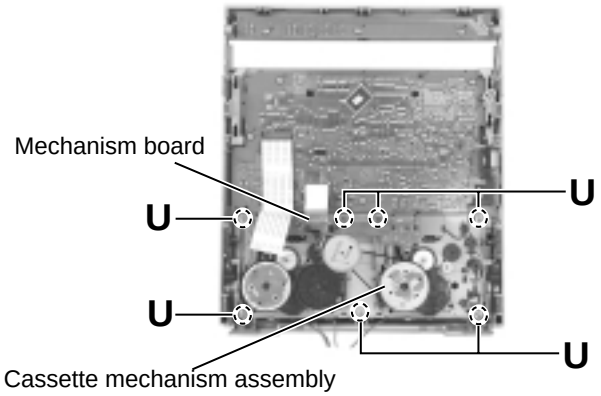

Fig.25

<CD changer unit>

・Prior to performing the following procedure, remove the CD changer unit.

■Removing the CD tray (See Fig.26 to 28)

1. Turn the black loading pulley gear marked **c** on the under side of the CD changer unit in the direction of the arrow and draw the CD tray toward the front until it stops.

2. Disconnect the card wire from connector SCW5 of the CD servo board on the upper side of the CD changer unit.

3. Push down the two tray stoppers marked **i** and pull out the CD tray.

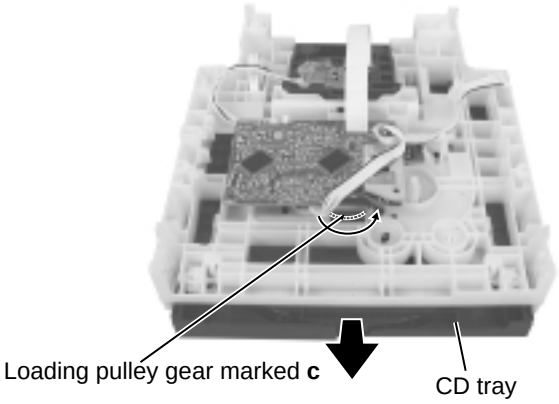

Fig.26

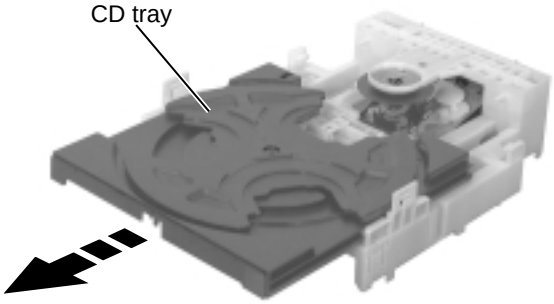

Fig.27

■Reinstall the CD tray (See Fig.29 to 30)

1. Align the gear-cam with the gear-tray as shown fig.29, then mount the CD tray.

2. When assembling the CD tray, take extreme care not engage with gear - synchro.

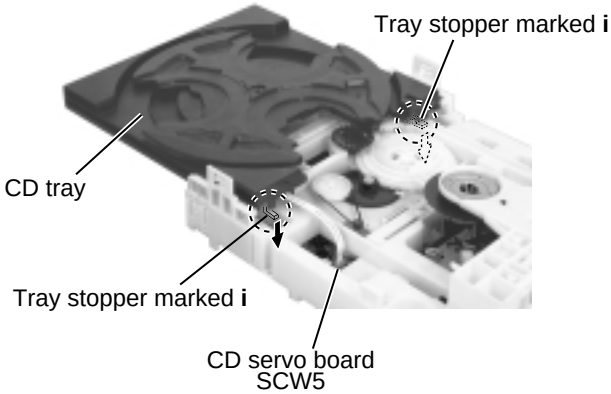

Fig.28

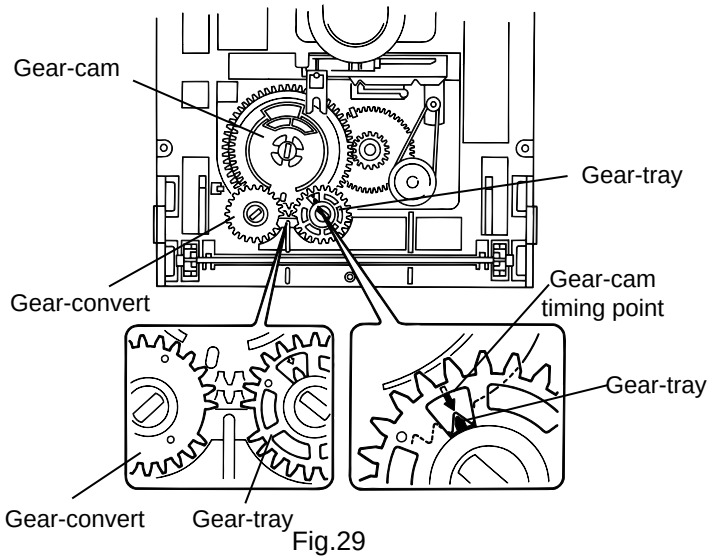

Fig.29

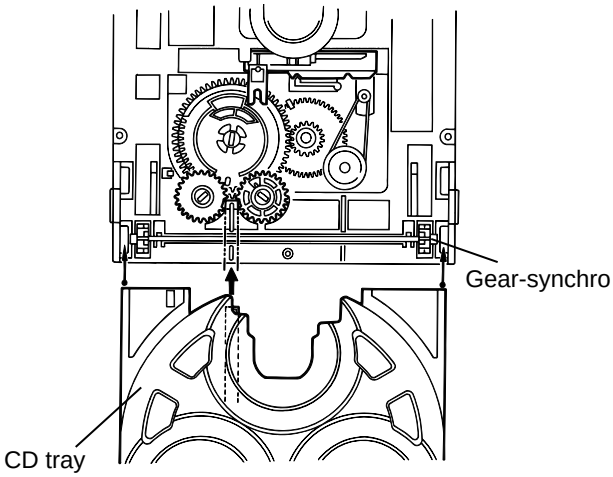

Fig.30

■Removing the sensor board / the tray motor (See Fig.31 to 33)

・Prior to performing the following procedure, remove the CD tray.

1. Release the two tabs **j** attaching the sensor board on the under side of the CD tray.

2. Disconnect the harness from connector CW1 on the sensor board and release the harness from the two hooks **k**. Remove the sensor board.

3. Remove the screw **W** attaching the tray turn table. Detach the tray turn table from the tray.

4. Pull outward the tab marked **m** attaching the tray turn table motor assembly on the upper side of the tray and detach the tray turn table motor assembly from the tray.

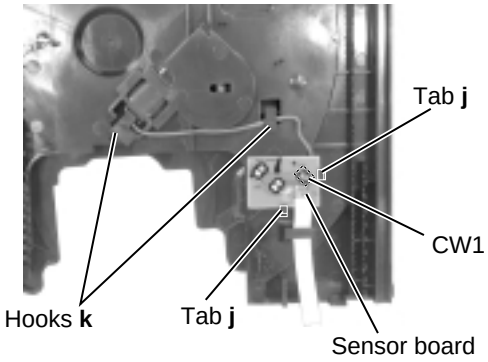

Fig.31

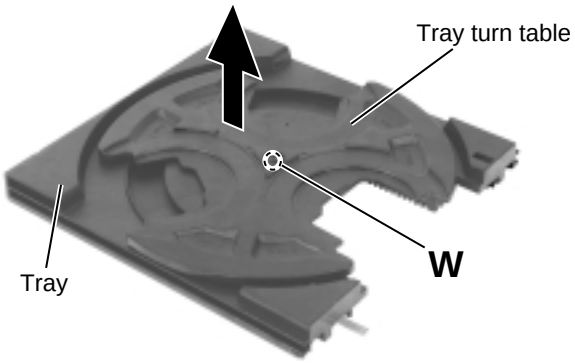

Fig.32

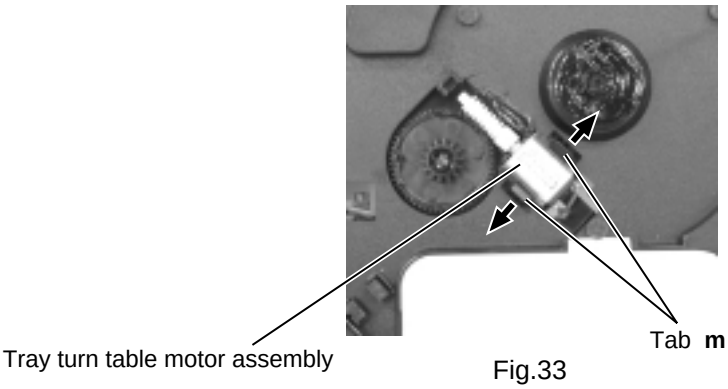

Fig.33

■Removing the belt, the CD servo board and the switch board (See Fig.34 and 35)

・Prior to performing the following procedure, remove the CD tray.

1. Detach the belt from the pulley on the upper side of the CD changer unit (Do not stain the belt with grease).

2. Disconnect the card wire from the pickup unit connector on the under side of the CD changer unit.

3. Disconnect the motor wire harness from connector on the CD mechanism board.

4. Remove the two screws **X** attaching the CD servo board. First release the n side of the two tabs **n** and two tabs **o** attaching the CD servo board motor to raise the CD servo board slightly, then release the o side.

※If the tabs **n** and **o** are hard to release, it is recommendable to unsolder the two soldered parts on the motor terminal of the CD servo board.
Disconnect the terminal CW3 connected to the switch board and remove the CD servo board.

5. Release the three tabs **p** attaching the switch board outward and detach the switch board.

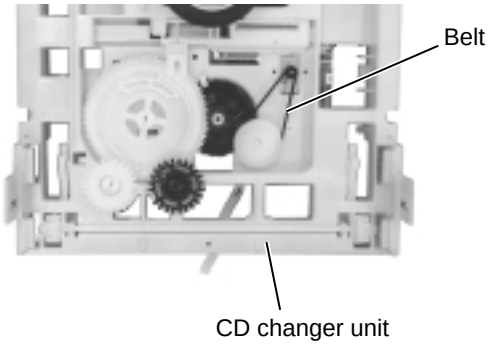

Fig.34

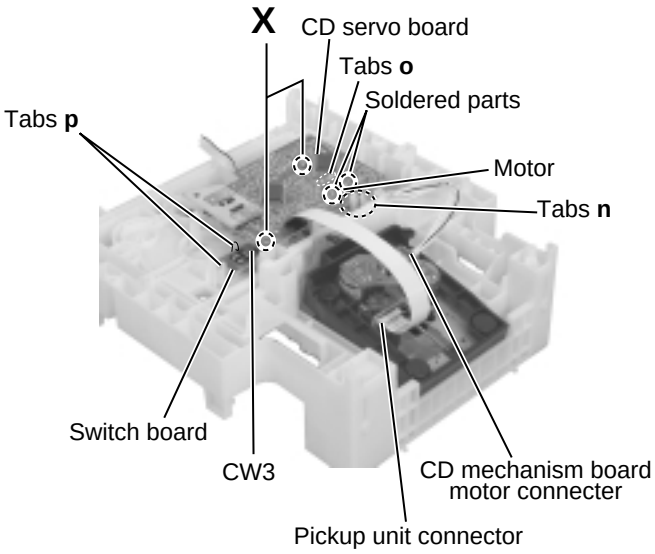

Fig.35

■ Removing the CD mechanism holder assembly (mechanism included) (See Fig.36 to 39)

1. Disconnect the harness from connector on the CD mechanism board in the CD mechanism assembly on the under side of the CD changer unit. Disconnect the card wire from the pickup unit connector.

2. Remove the screw **Y** attaching the shaft on the right side of the CD mechanism holder assembly. Pull outward the stopper fixing the shaft on the left side and remove the CD mechanism holder assembly from behind in the direction of the arrow.

3. Turn the CD mechanism holder assembly half around the lift up slide shaft **r** of the CD mechanism holder assembly until the turn table is reversed, and pull out the CD mechanism holder assembly.

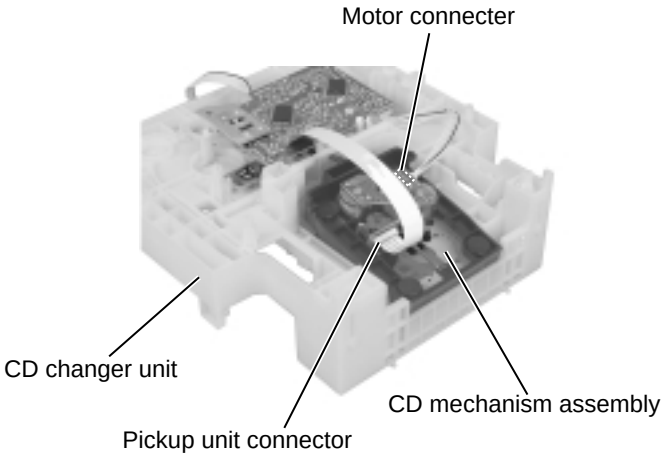

Fig.36

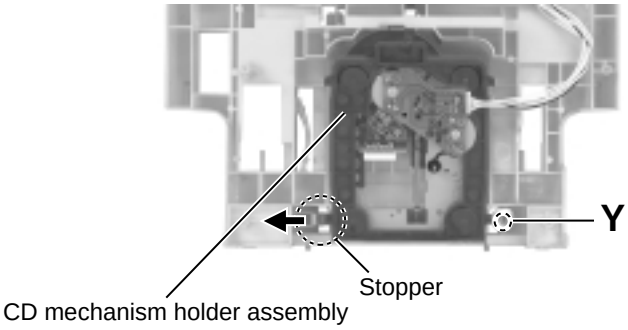

Fig.37

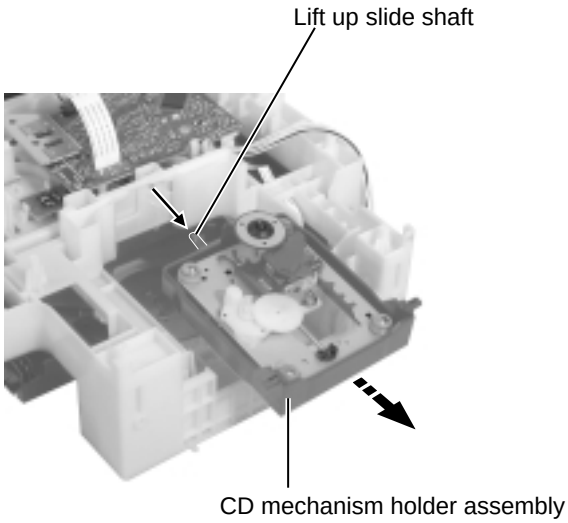

Fig.39

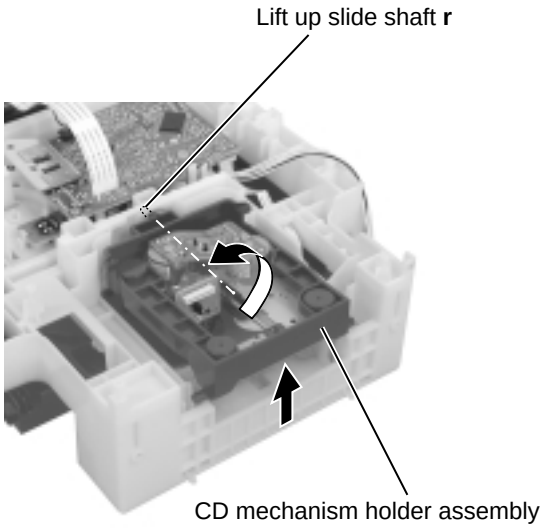

Fig.38

<CD mechanism section>

- Removing the CD mechanism holder from the CD chassis to remove the CD mechanism.
  (Refer to "Removing the CD mechanism holder assembly" (Pag.2-11))

■ Removing the pickup unit.

1. Loosen the two screws **A** fixing the chassis.(Fig.1)
2. Removing the feed gear stopper **c** on the bottom of the mechanism and pull out the gear. (Fig.1, Fig.3, Fig.4)
3. Pull out the shaft by opening the pickup shaft stopper outward to unlock.(Fig.1, Fig.2)
4. Removing the pickup unit.(Fig.1)

■ Removing the motor board.

1. Unsolder the motor terminal on the motor board.(Fig.3)
2. Remove the moter board.(Fig.3)

■ Removing the feed motor.

Remove the two motor fixing screws at **B** and removing the feed motor.(Fig.1, Fig.3)

■ Removing the spindle motor.

The spindle motor cannot be removed as a single unit. When removing the spindle motor, change the chasis and turntable together as aunit.(Fig.5)

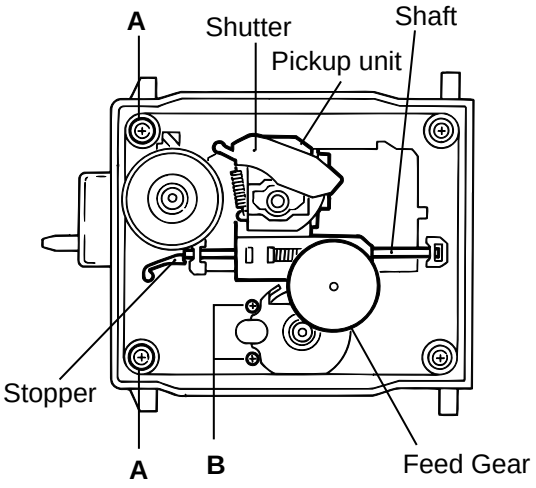

Fig.1

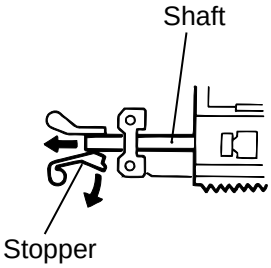

Fig.2

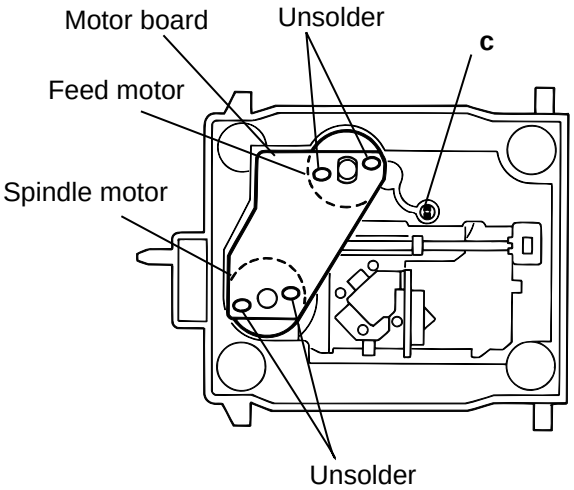

Fig.3

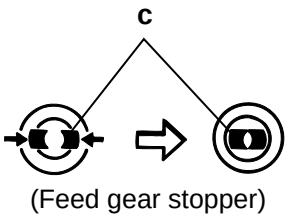

Fig.4

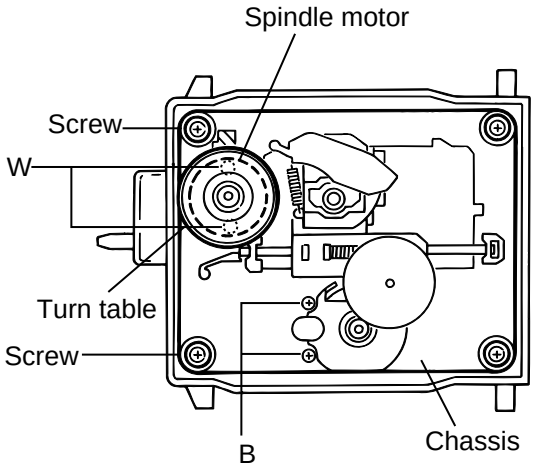

Fig.5

<Cassette mechanism section>

- Removing the record/playback mechanism.

■ Removing the R/P head.

1. Remove the screw **A** on the right side of the R/P head.(Fig.1, Fig.2)
2. Remove the screw **B** on the left side of the R/P head.(Fig.1, Fig.2)

■ Remove the erase head.

Remove the screw **C** fixing the erase head.(Fig.1)

■ Removing the pinch roller.

1. Pull out the pinch roller by opening the pinch roller stopper outward to unlock .(Fig.3)
2. When reassembling the pinch roller, refer to fig. 4 to hook up the spring.

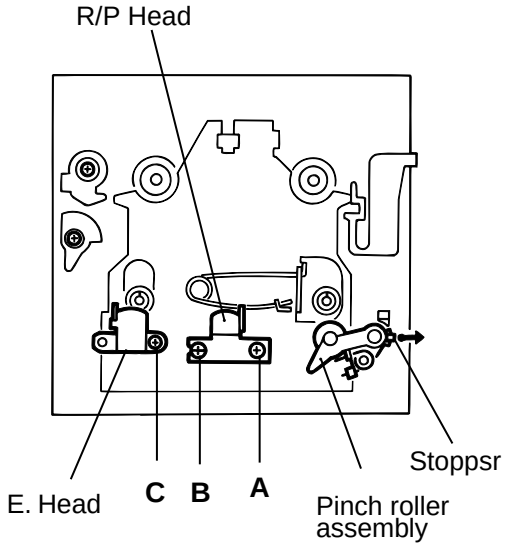

Fig.1

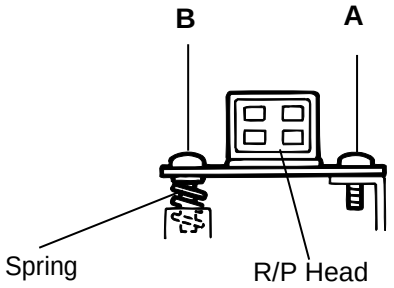

Fig.2

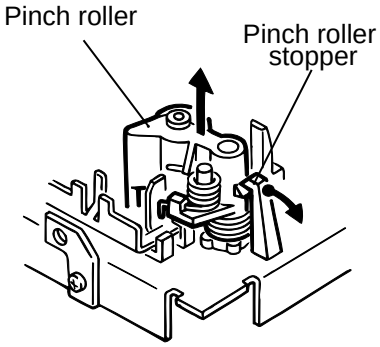

Fig.3

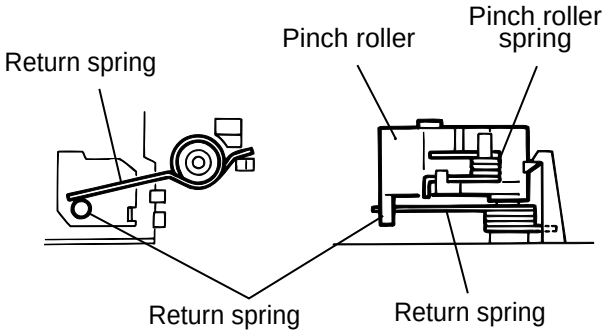

Fig.4

■ Removing the motor.

1. Remove the two screws **D** fixing the motor. Be careful to grease's splash when the drive belt comes off.(Fig.5, Fig.6)
2. Unsolder the motor terminal.(Fig.5)

■ Removing the mechanism board.

1. Unsolder the four parts **a** on the solenoid coil terminal.(Fig.5)
2. Remove the two screws **E** fixing the board.(Fig.5)
3. Unhook the three parts **b** from the board.(Fig.5)
4. Remove the mechanism board.(Fig.5)

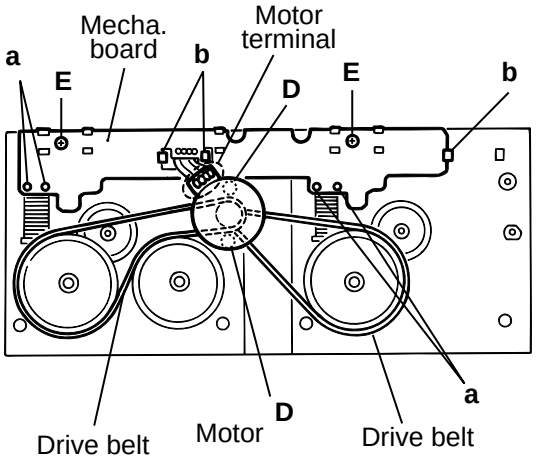

Fig.5

■ Removing the flywheel.

Remove the cut-washers at **c** and **d** from the capstan shaft, then remove the flywheen. When reassembling the flywheel, be sure to use new washers as they cannot be reused.(Fig.8, Fig.9)

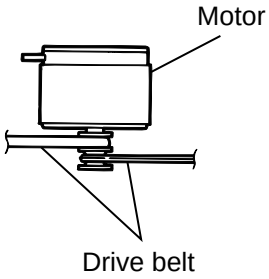

Fig.6

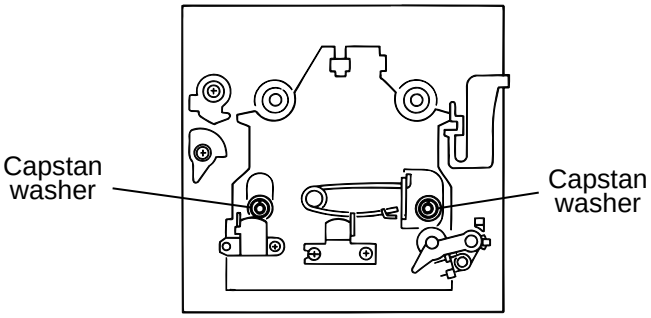

Fig.7

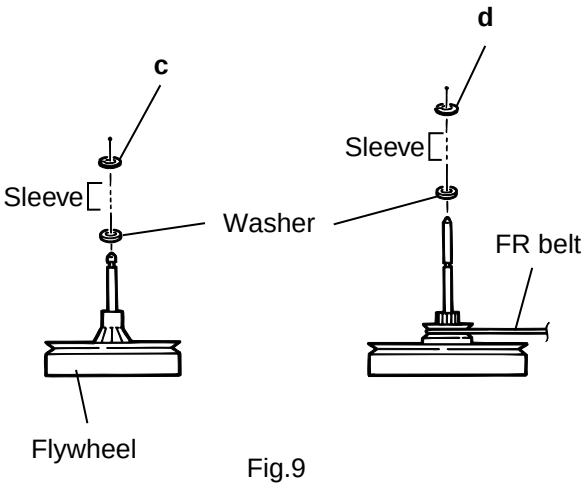

Fig.9

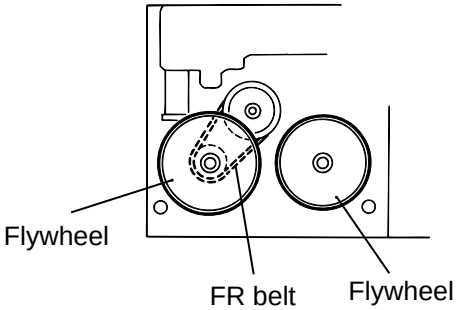

Fig.8

Ajustment method

■ Tuner

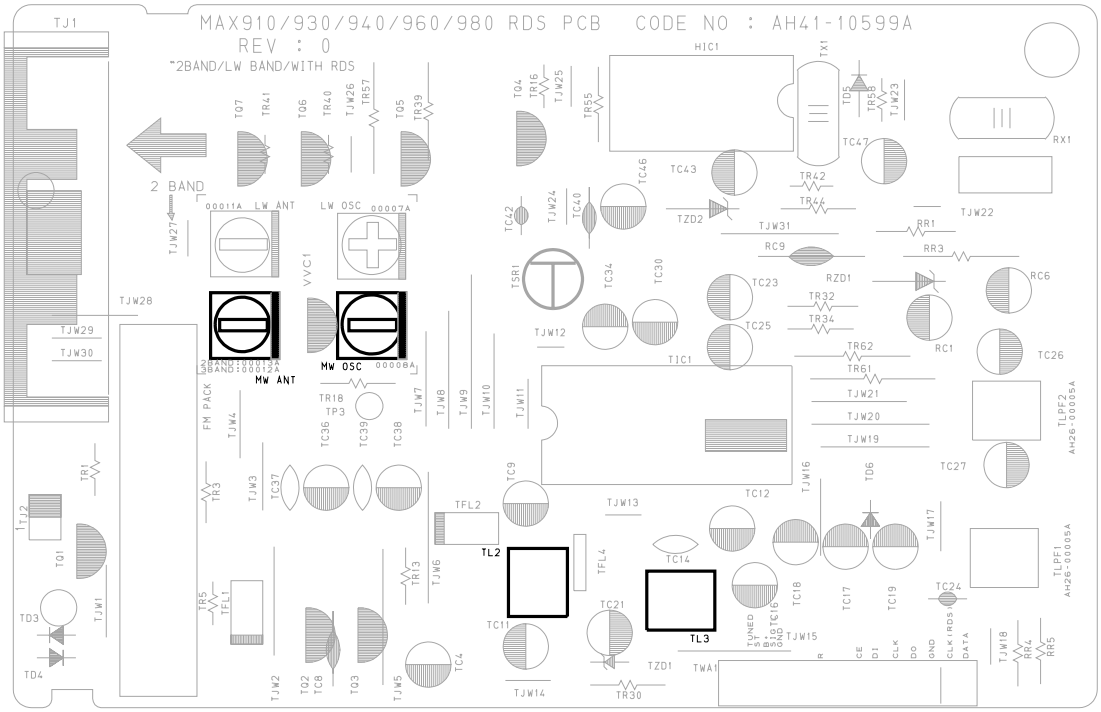

✱ Adjustment Location of Tuner PCB

ITEAM	AM(MW) OSC Adjustment	AM(MW) RF Adjustment
Received FREQ.	520~1720 KHz	590 KHz
Adjustment point	Non- Adjustment	MW -ANT
Output	1~7.0±0.5V	Maximum Output(Fig1-4)

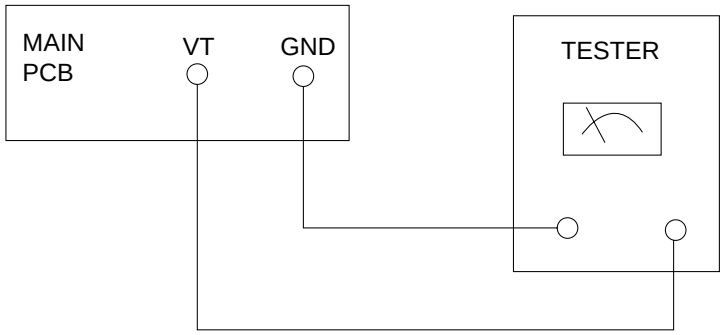

Fig 1-4 OSC Voltage

FM THD Adjustment	
SSG FREQ.	98 MHz
Adjustment point (TL3)	FM DETECTOR COIL
Output	60 dB
Minumum Distortion (0.3% below) (Figure 1-1)	

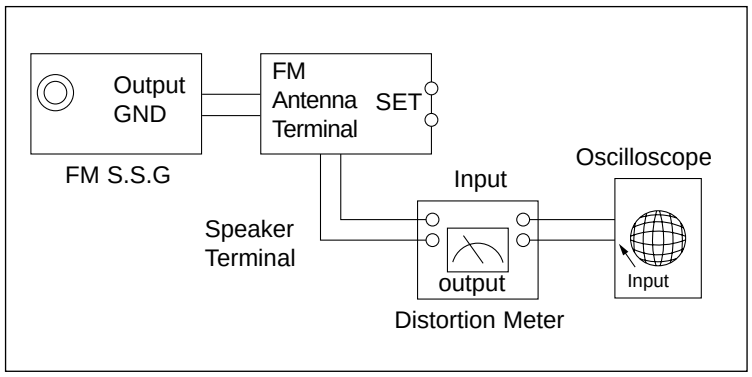

Figure1-1 IF CENTER and THD Adjustment

FM Search Level Adjustment	
SSG FREQ.	98 MHz
Adjustment point (TSR1)	BEACON SENSITIVITY SEMI-VR(20K½)
Output	28 dB(±2dB)
Adjust TSR1 so that “TUNED” of FL T is lighted (Figure 1-2)	

*Adjust FM S.S.G level to 28dB

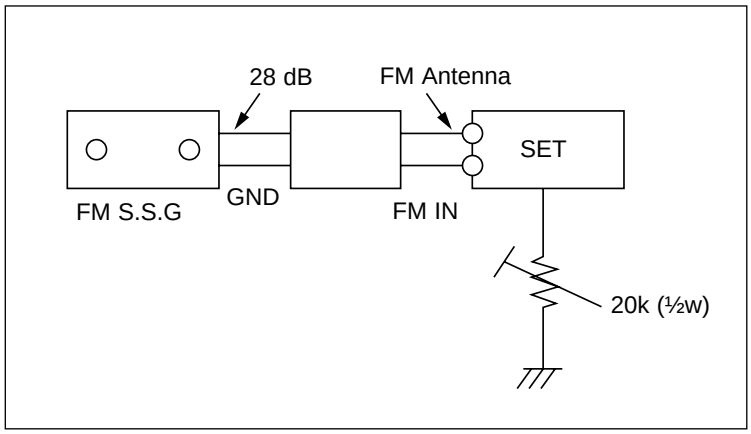

Figure1-2 FM Auto Search Level Adjustment

AM(MW) I.F Adjustment	
SSG FREQ.	450 kHz
Frequency	520 kHz
Adjustment point (TL2)	AM I.F COIL
Maximum output (Figure 1-3)	

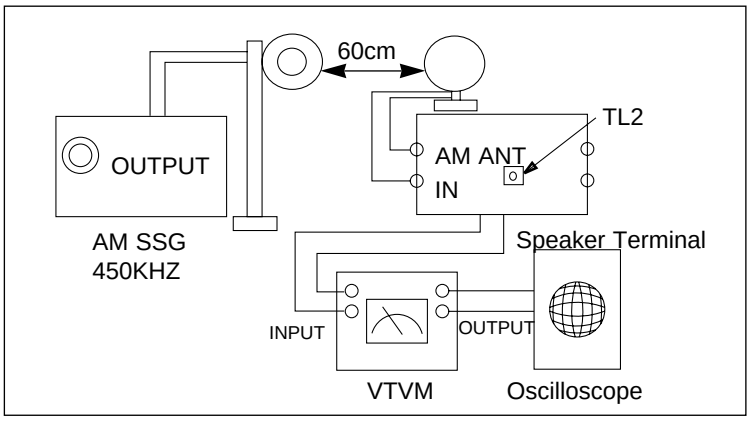

Figure1-3 AM I.F Adjustment

■ Cassette deck

1. To adjust tape speed

Notes

1) Measuring tape: VT 712 (or equivalent)
(Tapes recorded with 3kHz)

2) Connect the cassette deck to the frequency counter as in figure 1-5.

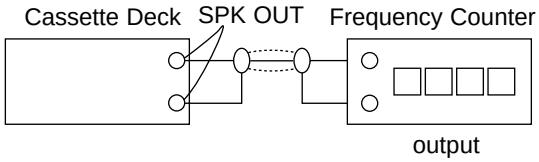

Figure 1-5

Step	Item	Pre-Setup Condition	Pre-Setup	To Adjust	Standard	Remark
1	NOR SPEED Control	OUT (connected to the frequency counter)	1) Deck A:VT 712 2) Press PLAY SW button 3) Deck B:Same as above	Turn UVR2 to left and right (FRONT PCB)	3KHz	±1% range

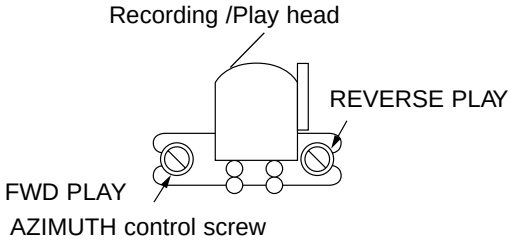

Figure 1-6

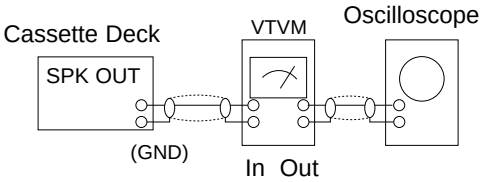

Figure 1-7

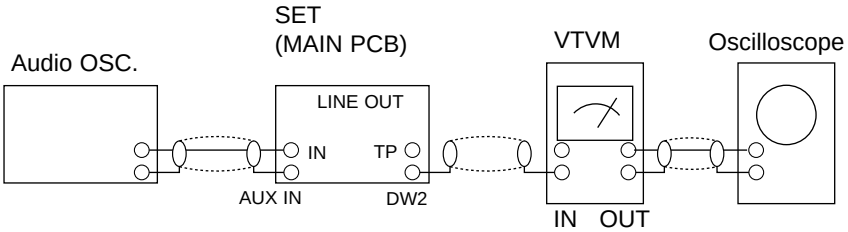

Figure 1-8

2. To adjust playback lebel/REC

Notes

1) Before the actual adjustment, clean the play/recording head.
2) Measuring tape :
   i) VT 705(or equivalent 12.5kHz AZIMUTH control)
3) The cassette deck is connections as shown in figure 1-7.

1 Adjust Deck A Play Level

Step	Item	Pre-Setup Condition	Pre-Setup	To Adjust	Standard	Remark
1	AZIMUTH	TP1 OUT (VTVM is connected to the scope)	After putting VT705 into Deck A - Press FWD PLAY button.	- Turn the control screw to as shown in Figure 1-6.	Max output and same phase (both channels)	After adjustment secure it with REGION LOCK.

2 Adjust Deck B Play Level/REC BIAS

Step	Item	Pre-Setup Condition	Pre-Setup	To Adjust	Standard	Remark
1	AZIMUTH	TP1 OUT (VTVM is connected to the scope)	After putting VT705 into Deck B 1)Press FWD PLAY button. 2)Press REV PLAY button.	- Turn the control screw to as shown in Figure 1-6.	Max output and same phase (both channels)	After adjustment secure it with REGION LOCK.
2	Recording Bias Voltage	Fig 1-8	After putting MTT-5512 into Deck B 1)Press REC PLAY button. 2)MAIN PCB DCW2, connectted to VTVM	Turn DVR1,DVR2 to the right and left	7V(±0.5V)	

Flow of functional operation until TOC read

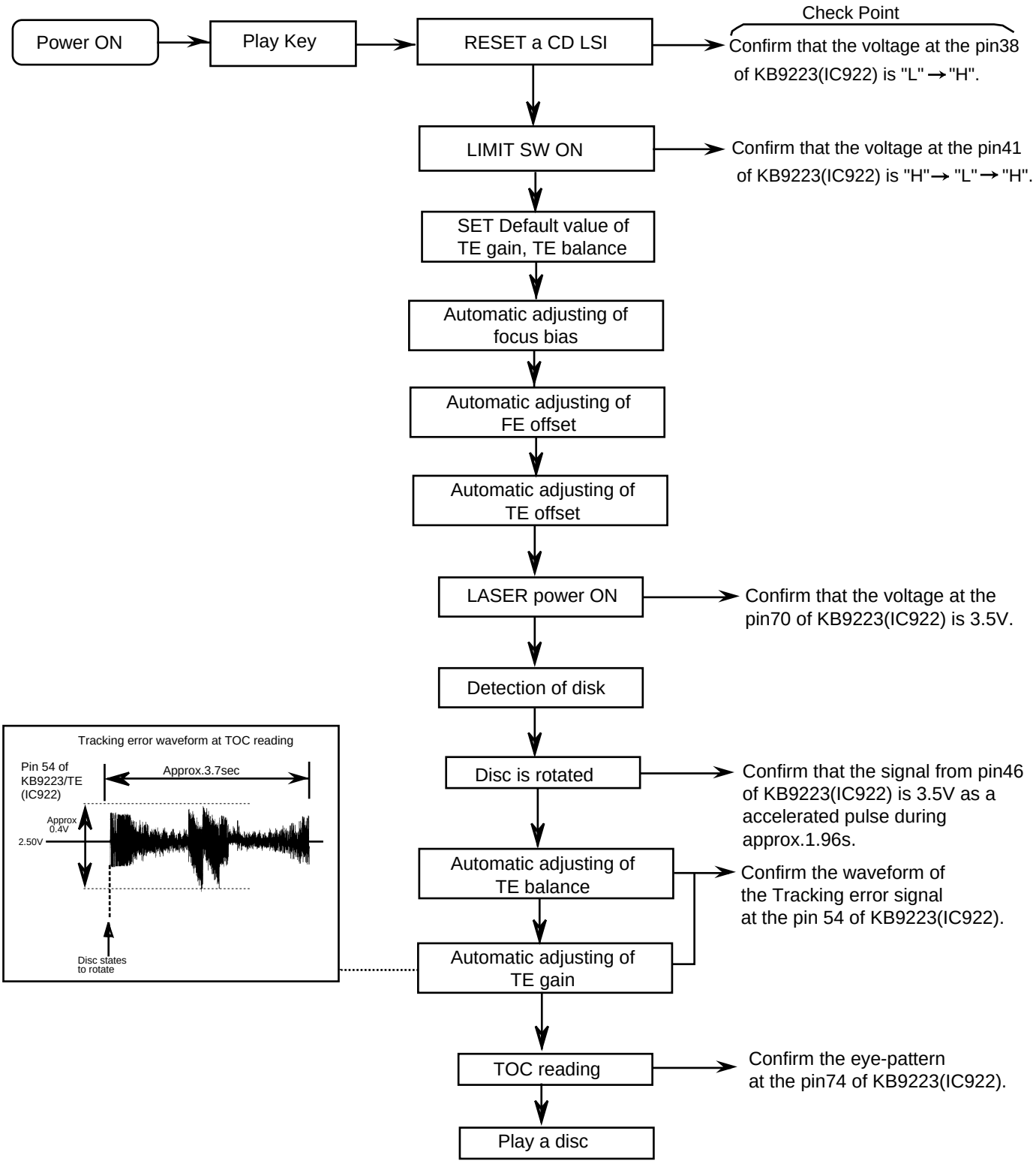

Maintenance of laser pickup

(1) Cleaning the pick up lens
Before you replace the pick up, please try to clean the lens with a alcohol soaked cotton swab.

(2) Life of the laser diode
When the life of the laser diode has expired, the following symptoms will appear.

1. The level of RF output (EFM output:amplitude of eye pattern) will below.

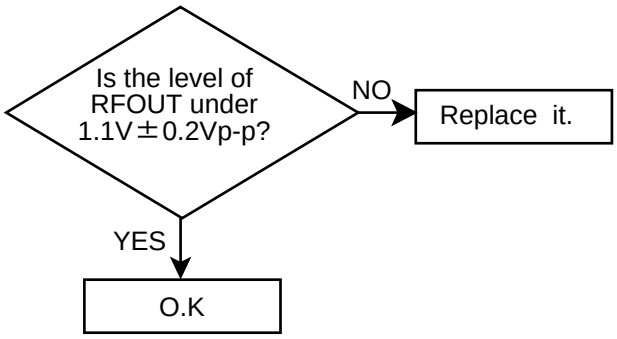

Replacement of laser pickup

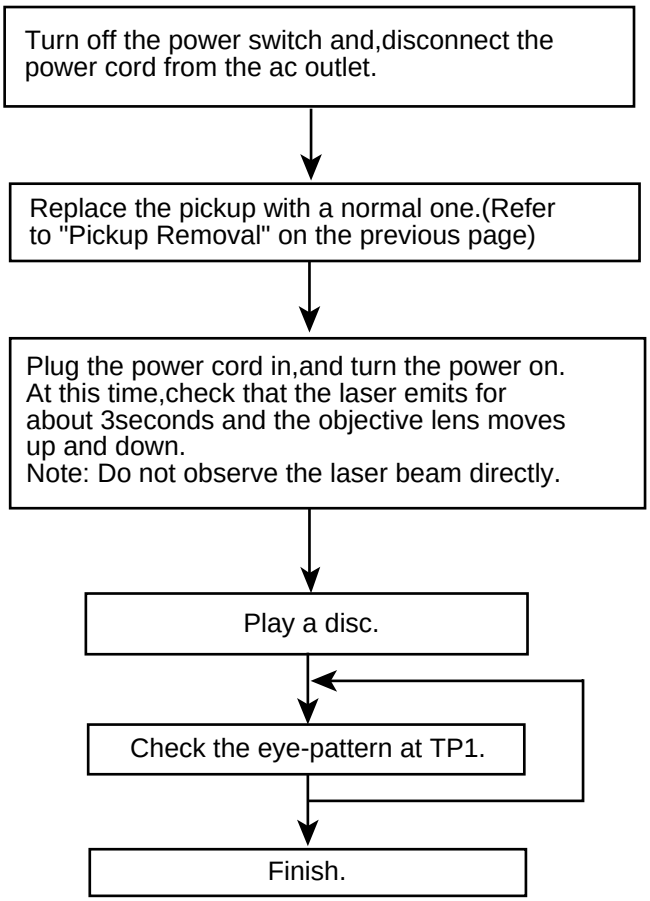

(3) Semi-fixed resistor on the APC PC board The semi-fixed resistor on the APC printed circuit board which is attached to the pickup is used to adjust the laser power.Since this adjustment should be performed to match the characteristics of the whole optical block, do not touch the semi-fixed resistor.
If the laser power is lower than the specified value,the laser diode is almost worn out, and the laser pickup should be replaced.
If the semi-fixed resistor is adjusted while the pickup is functioning normally,the laser pickup may be damaged due to excessive current.

Description of major ICs

■ LC75341 (FIC1):Function

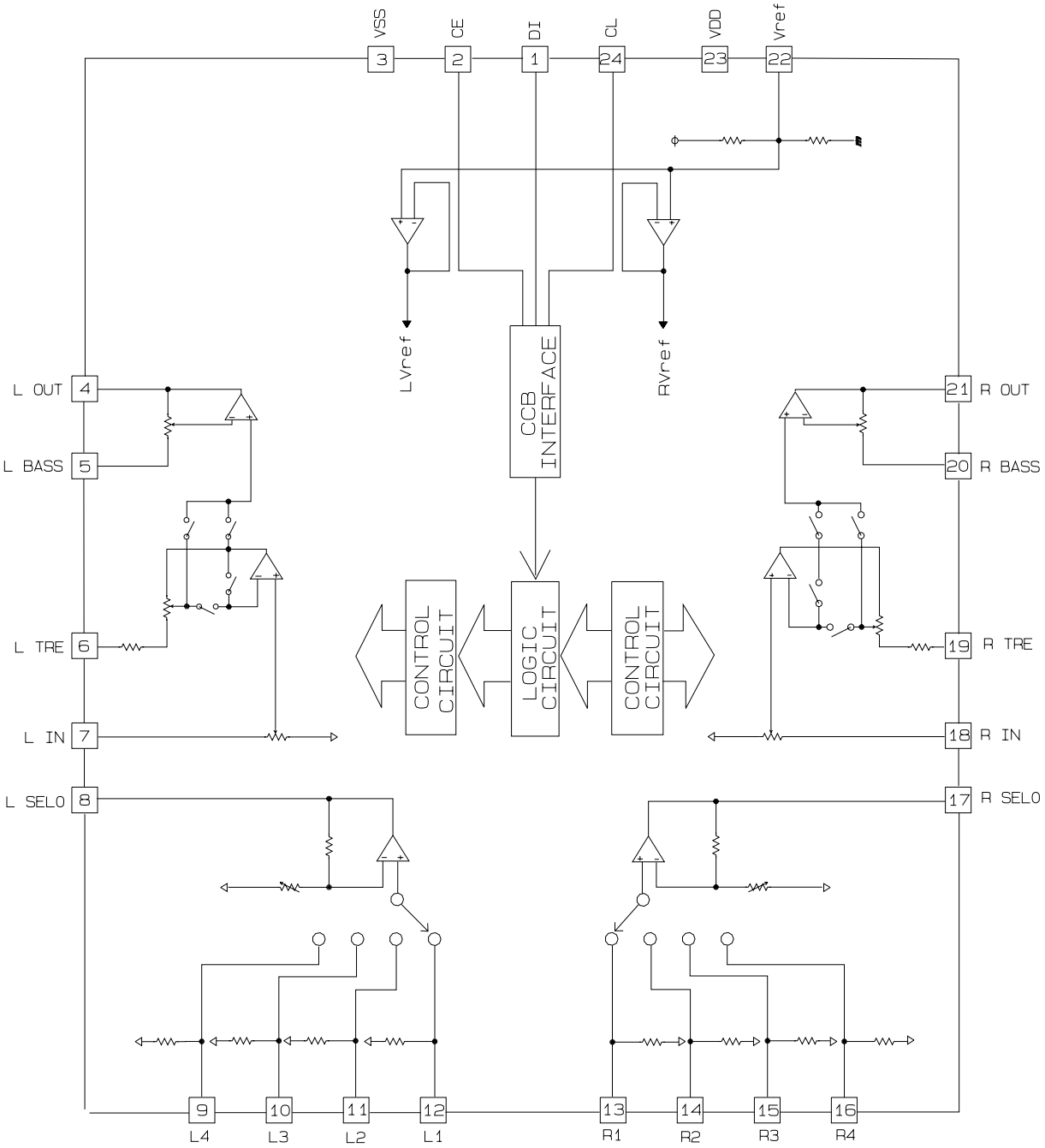

■ LC72131D (HIC1) : PLL

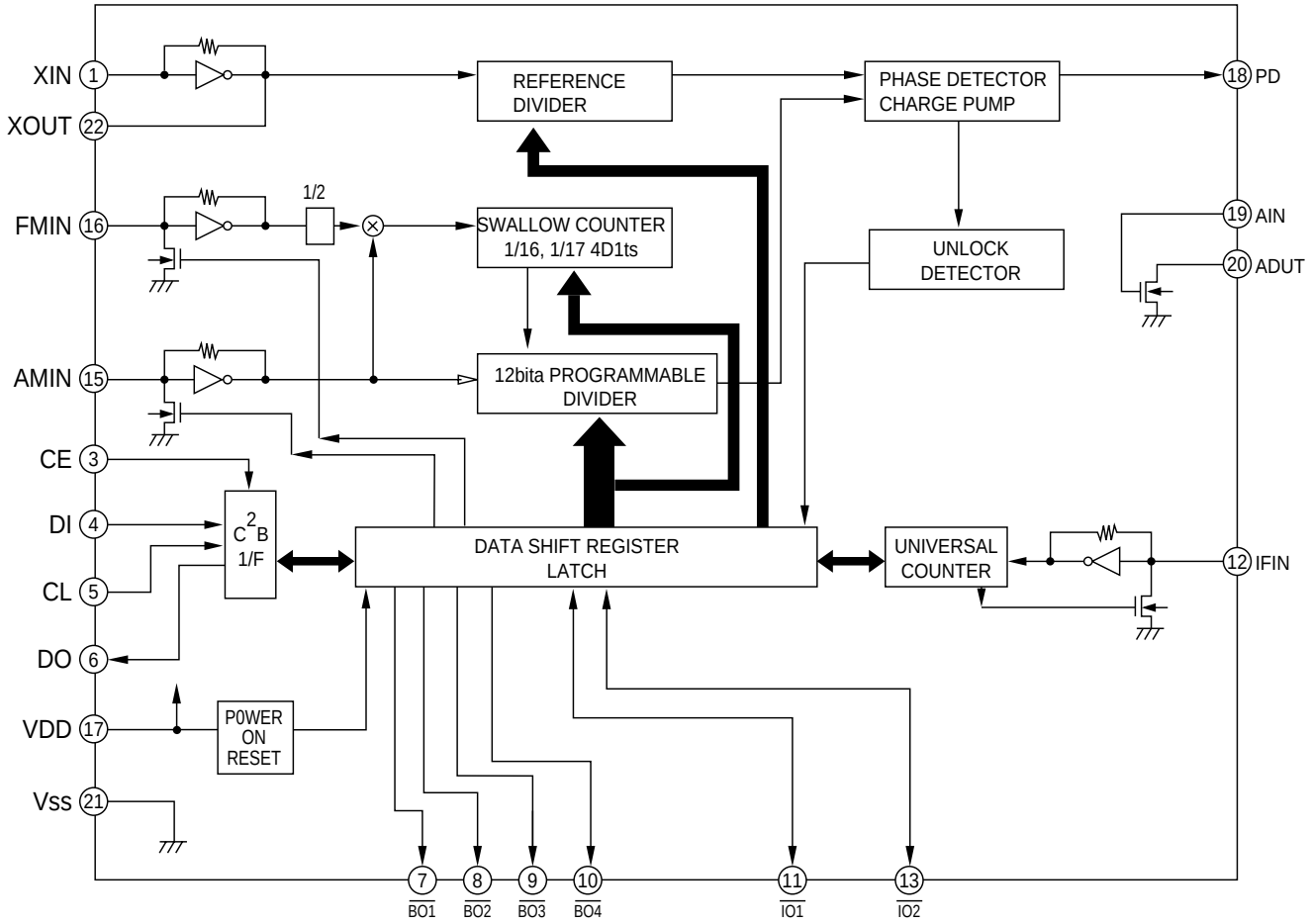

■ STK402-040 (AIC1)

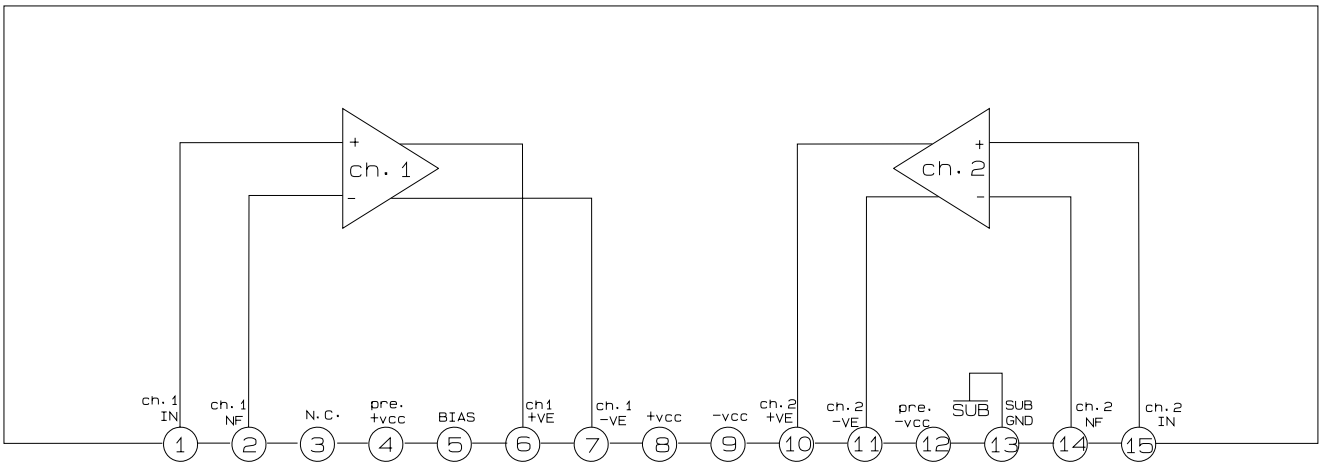

■ LA1837 (TIC1) : FM IF/DET AM RF/IF/DET

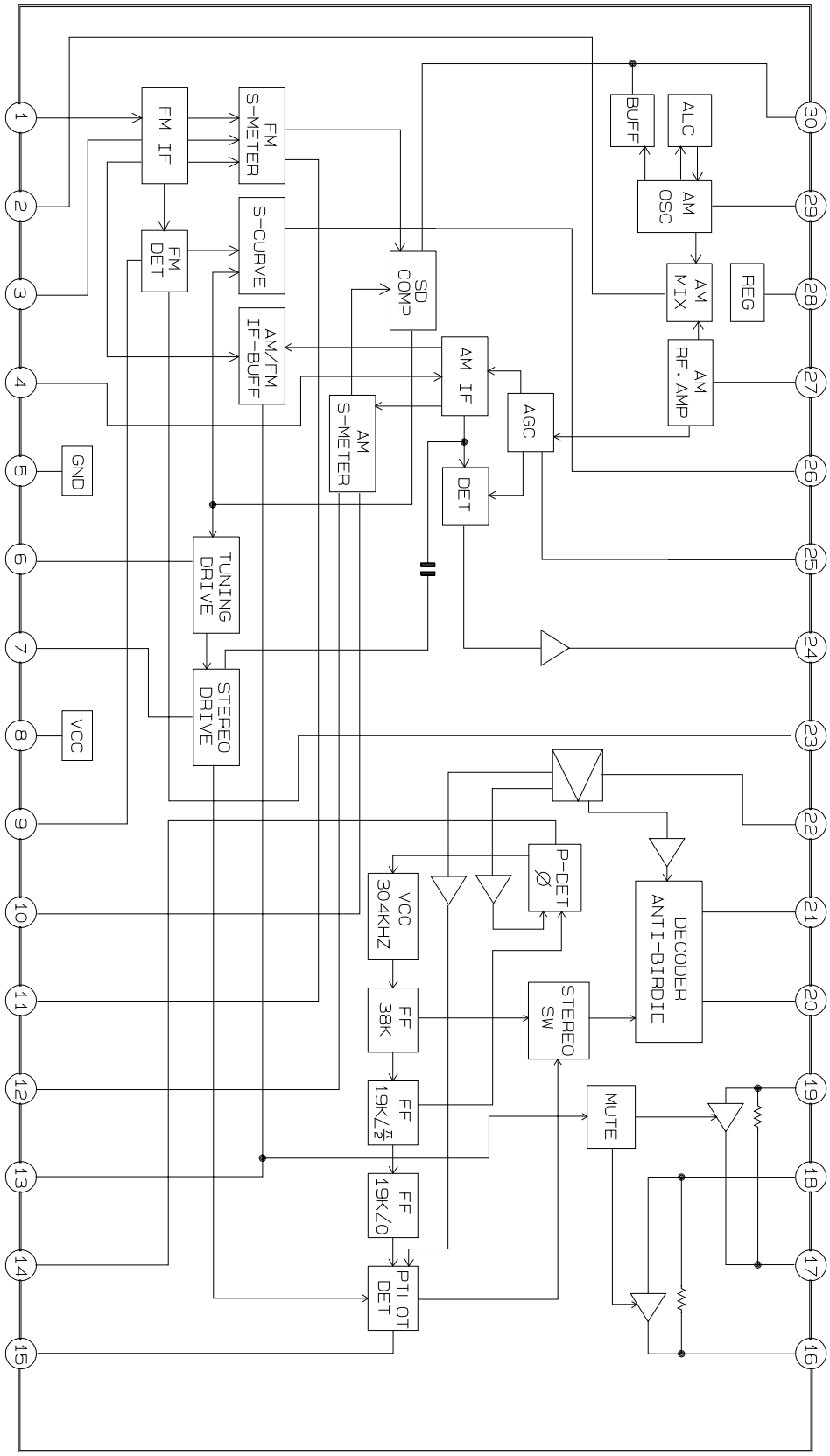

■ KS9286B (IC928) : DSP/D-A Converter

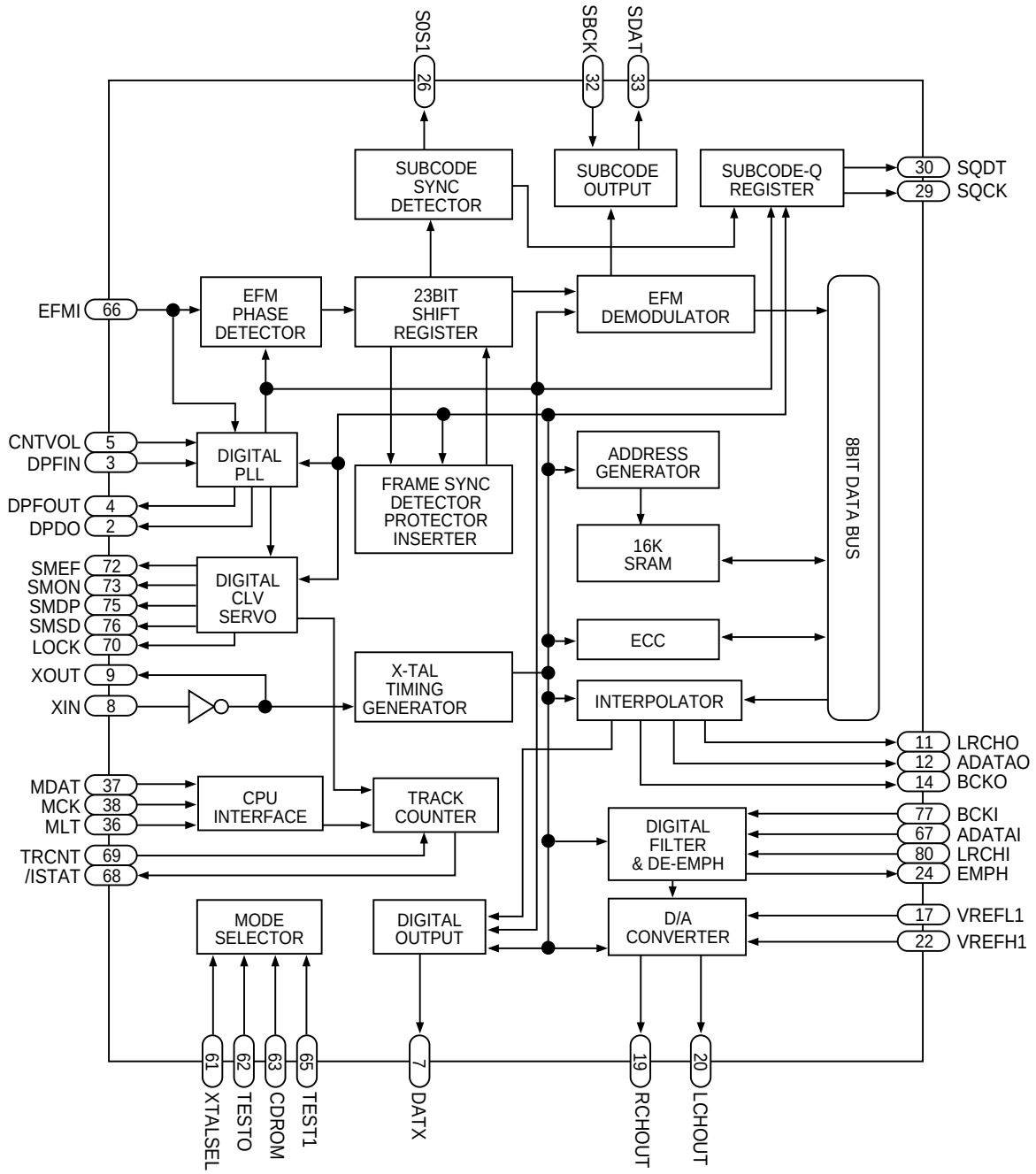

■ KB9223 (IC922) : ASSP(CD RF)

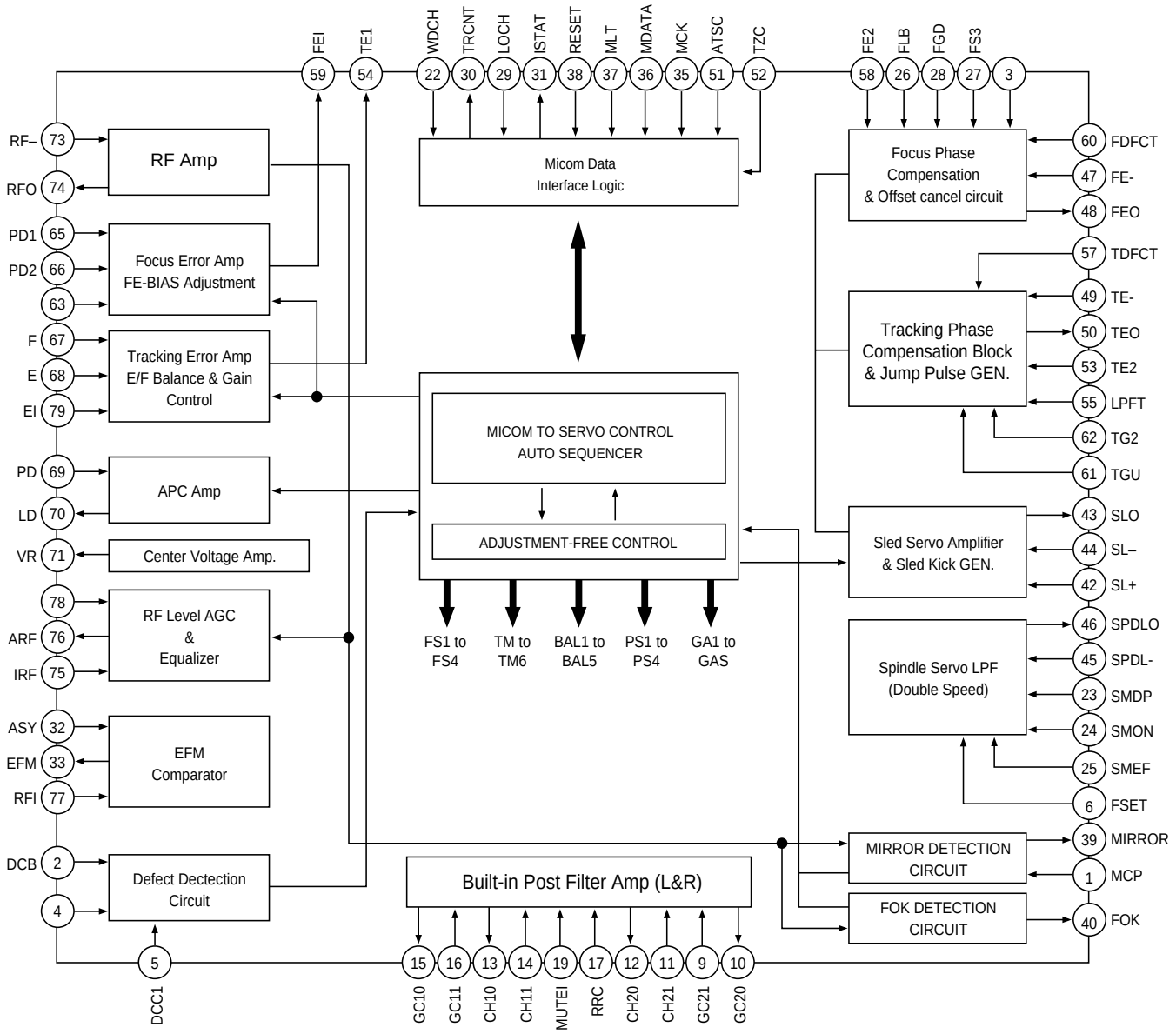

■ KA9258D (IC925) : 4-ch Motor driver

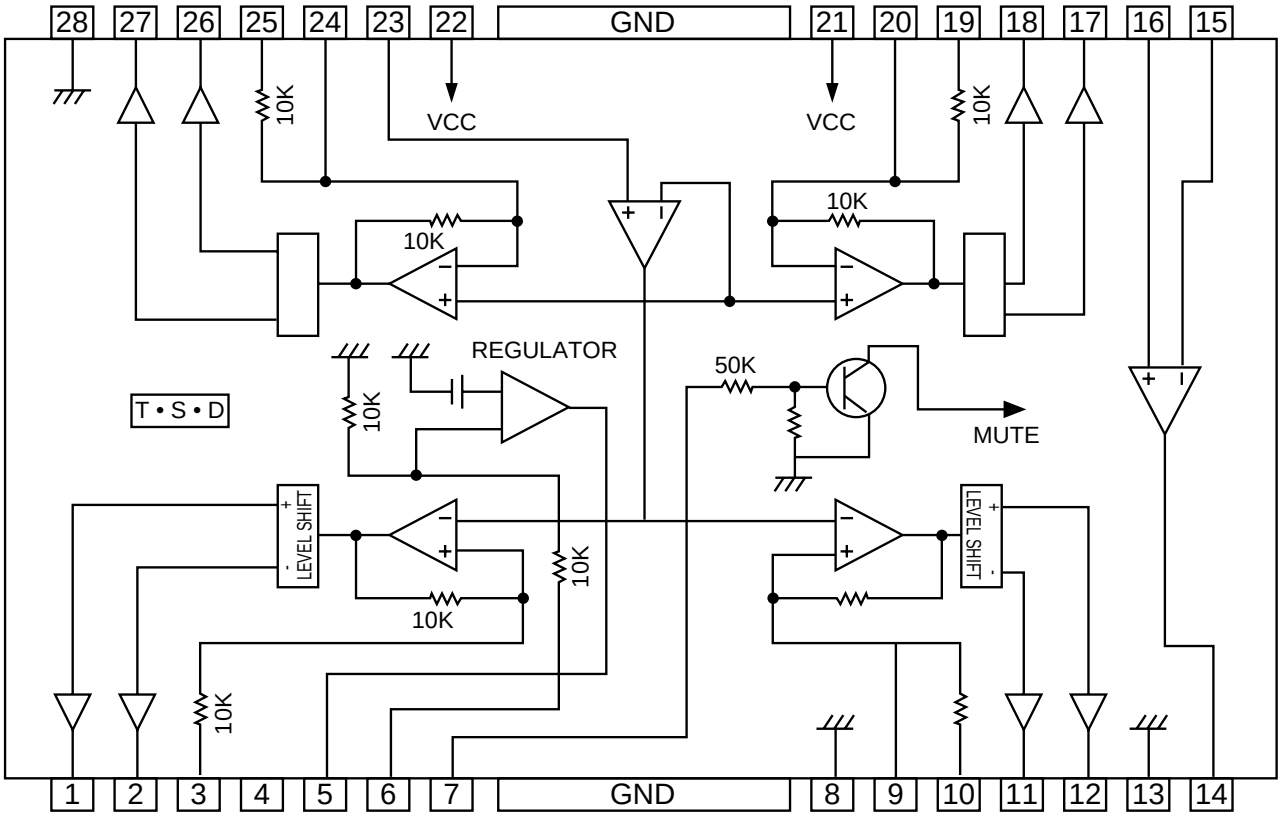

■ KA22291(DIC1) : Cassette amp.

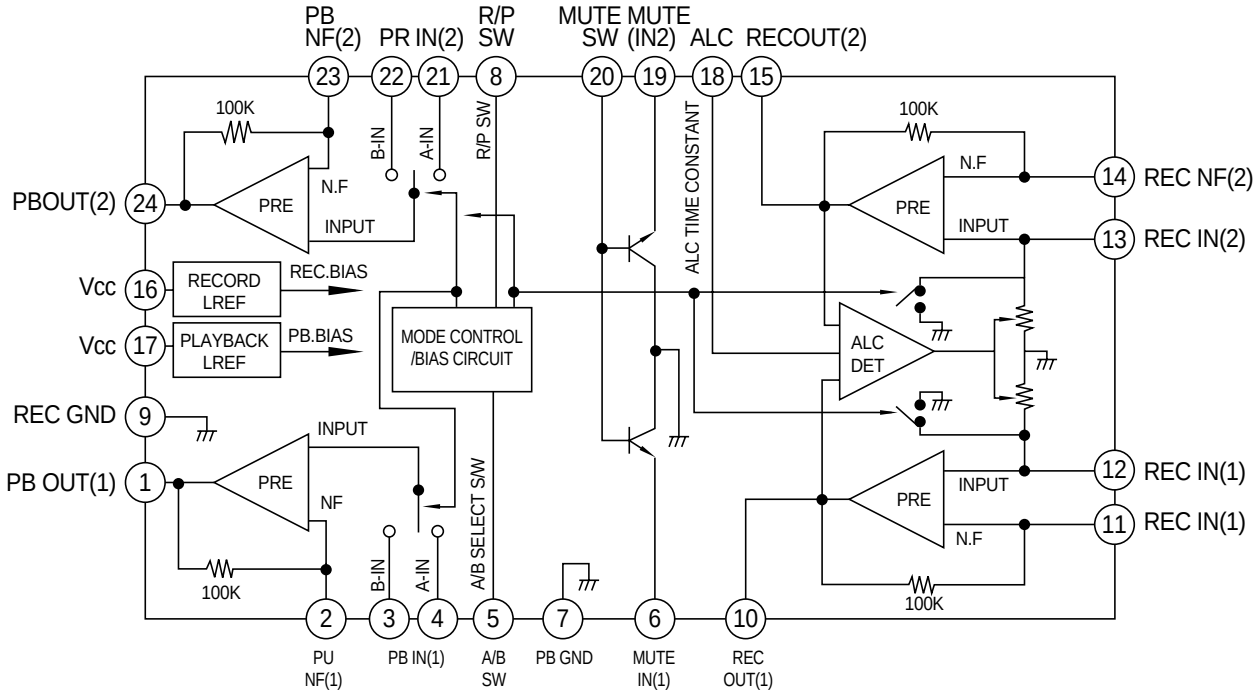

Block diagrams

■ Main section

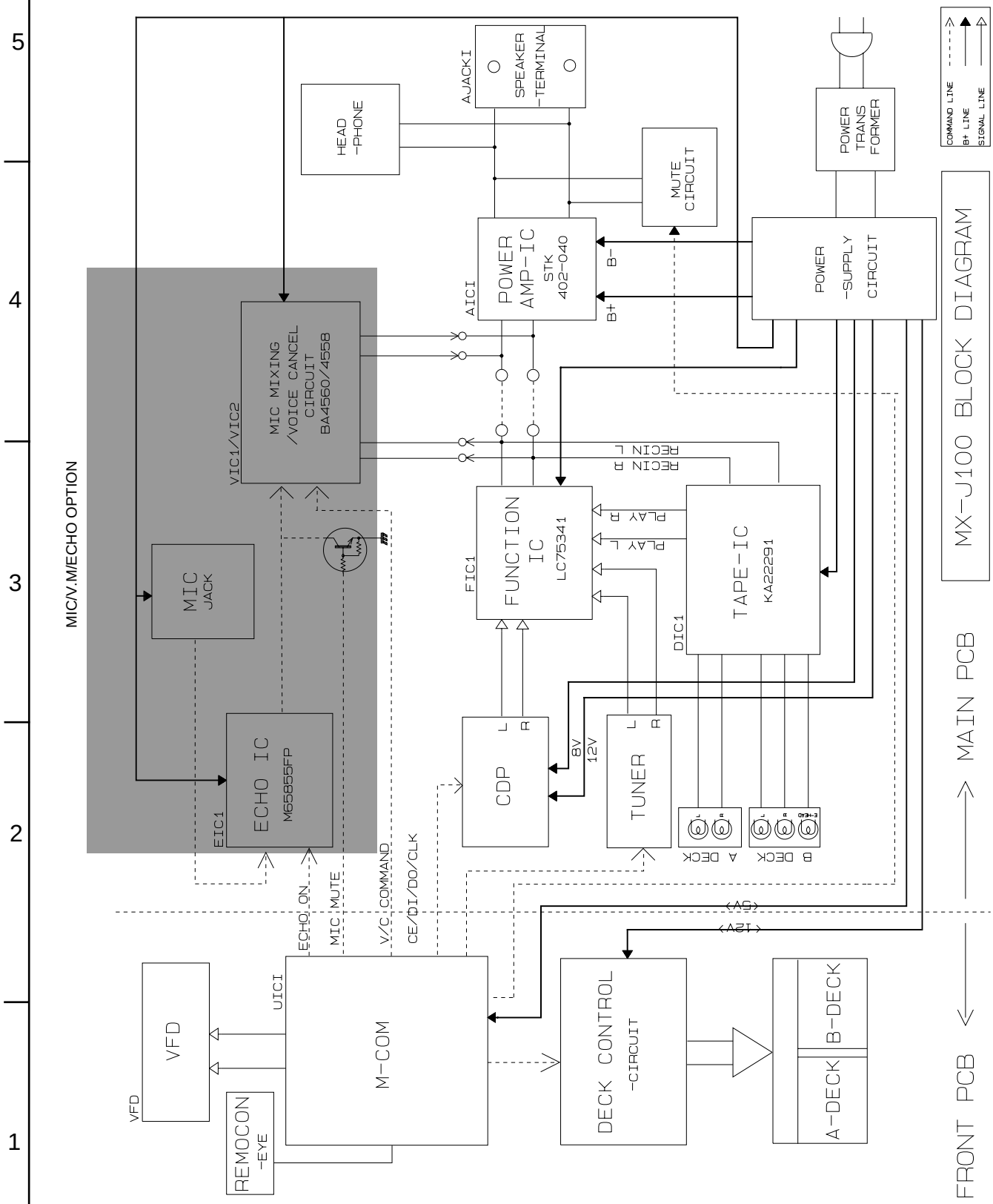

■ CD section

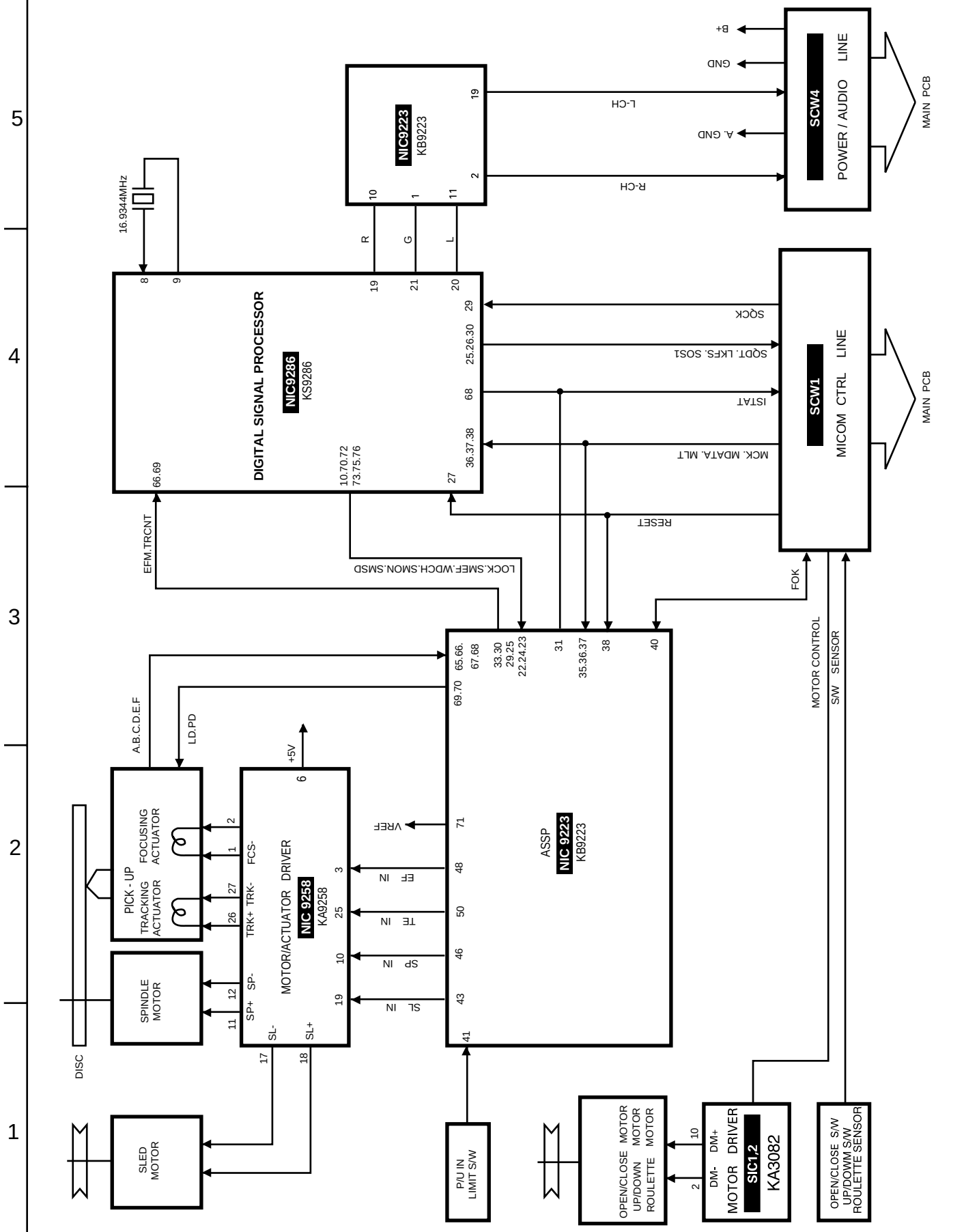
NIC9223
KB9223
SCW4
POWER / AUDIO
LINE
MAIN PCB
B+
GND
A. GND
L-CH
R-CH
16.9344MHz
DIGITAL SIGNAL PROCESSOR
NIC9286
KS9286
SCW1
MICOM CTRL
LINE
MAIN PCB
SQCK
SQDT. LKFS. SOS1
ISTAT
MCK. MDATA. MLT
RESET
EFM.TRCNT
LOCK.SMEF.WDCH.SMON.SMSD
FOK
MOTOR CONTROL
S/W SENSOR
A.B.C.D.E.F
LD.PD
+5V
VREF
PICK - UP
FOCUSING ACTUATOR
TRACKING ACTUATOR
MOTOR/ACTUATOR DRIVER
NIC 9258
KA9258
FCS-
TRK+ TRK-
SP+ SP-
SL- SL+
EF IN
TE IN
SP IN
SL IN
ASSP
NIC 9223
KB9223
SPINDLE MOTOR
DISC
SLED MOTOR
P/U IN LIMIT S/W
OPEN/CLOSE MOTOR
UP/DOWN MOTOR
ROULETTE MOTOR
DM+
DM-
MOTOR DRIVER
SIC1,2
KA3082
OPEN/CLOSE S/W
UP/DOWM S/W
ROULETTE SENSOR

Standard schematic diagrams

■ Front section

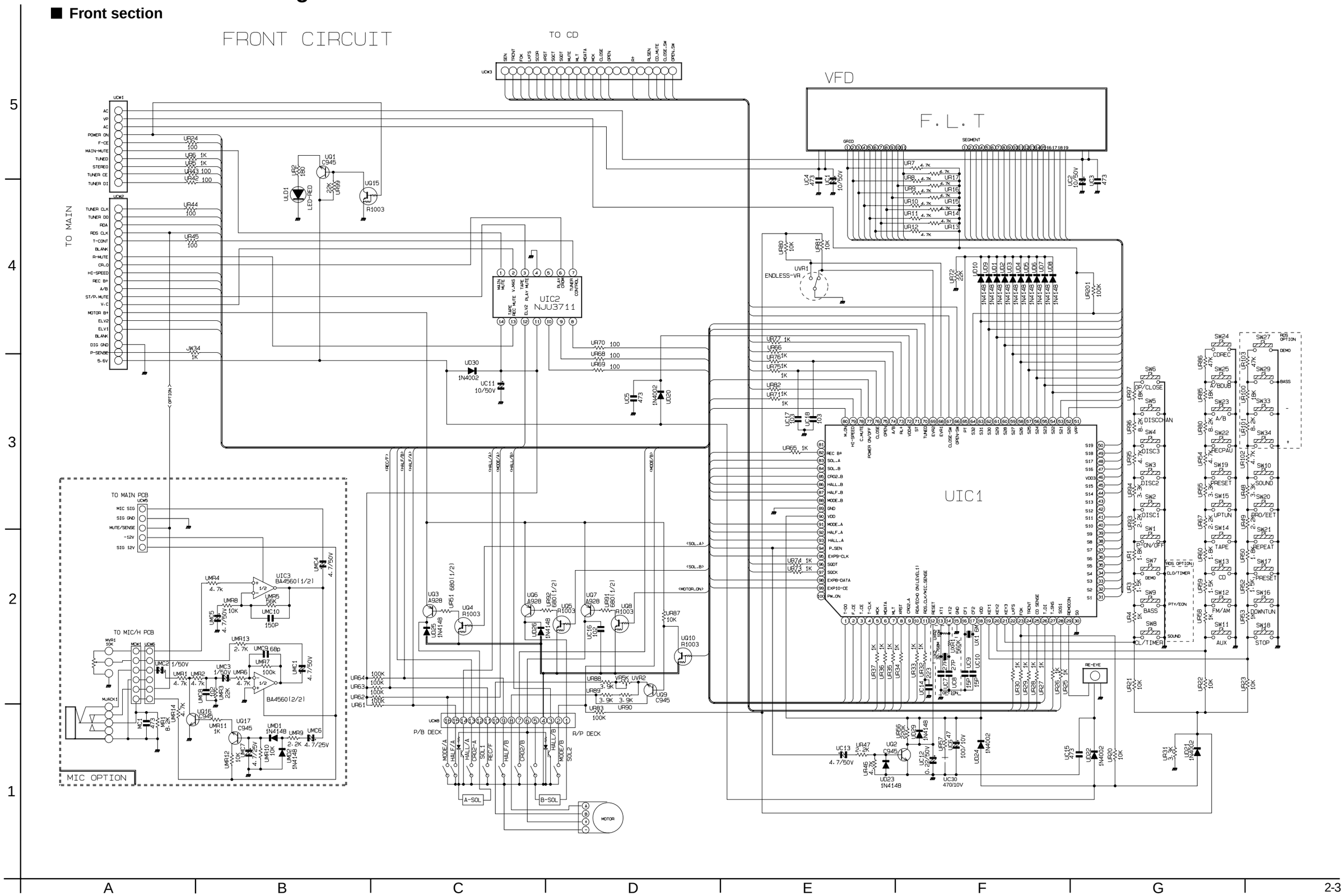

■ CD section

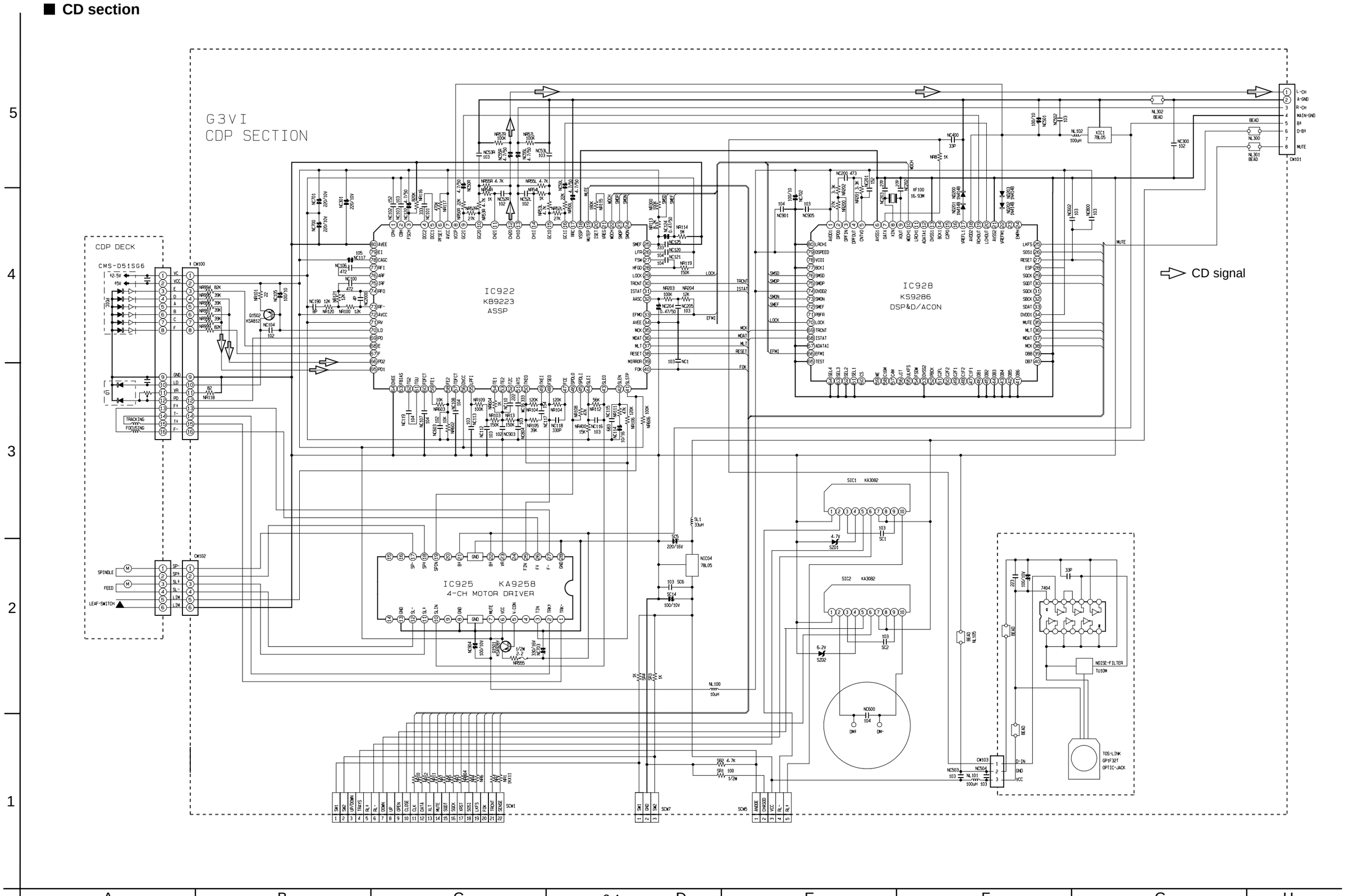
G3VI
CDP SECTION
CDP DECK
CMS-D51SG6
IC922
KB9223
ASSP
IC928
KS9286
DSP&D/ACON
IC925 KA9258
4-CH MOTOR DRIVER
CD signal
SPINDLE
FEED
LEAF-SWITCH
TRACKING
FOCUSING
NOISE-FILTER
TOS-LINK
OPTIC-JACK
L-CH
A-GND
R-CH
MAIN-GND
B+
D-B+
MUTE

■ Main section

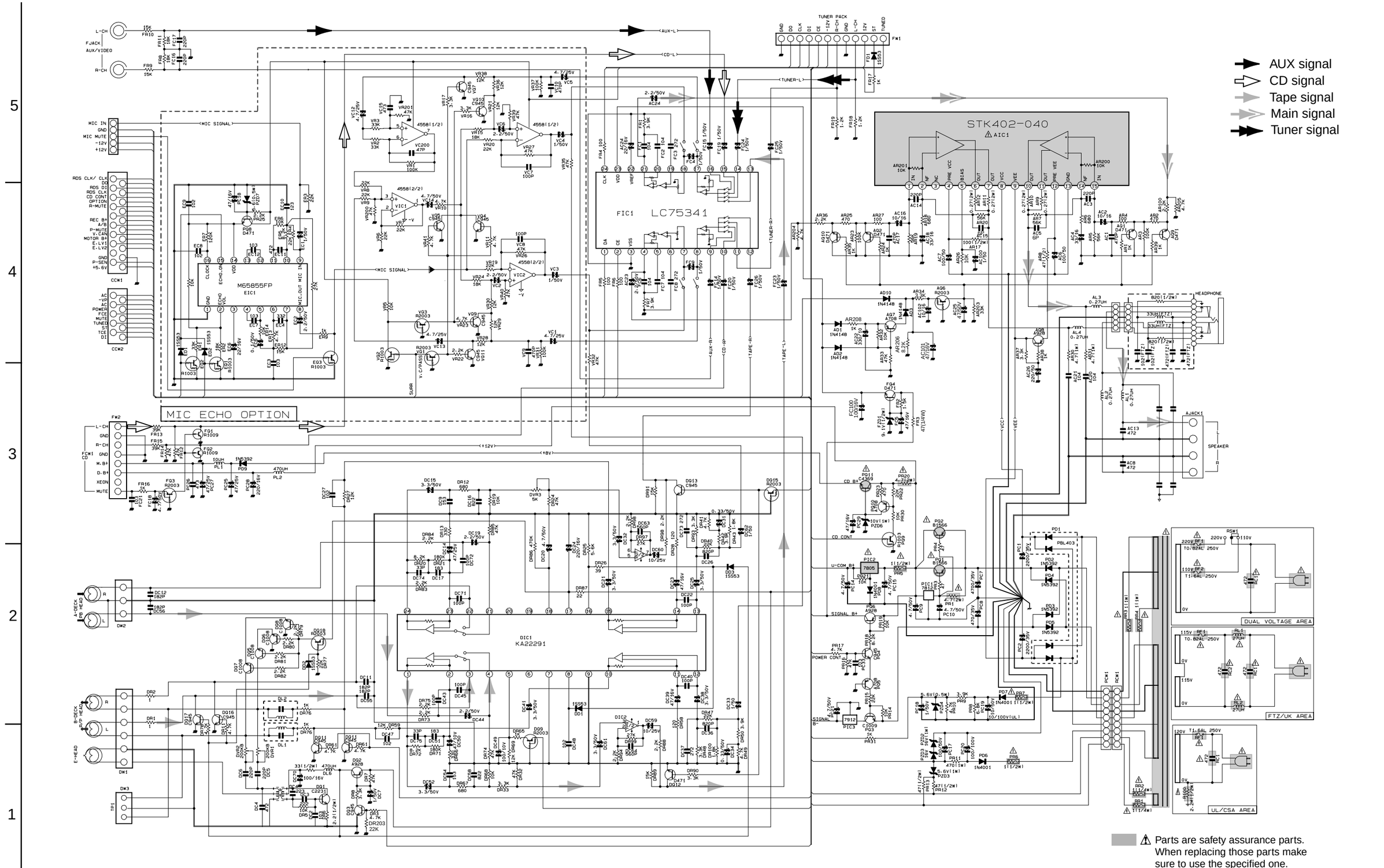

■ Tuner section

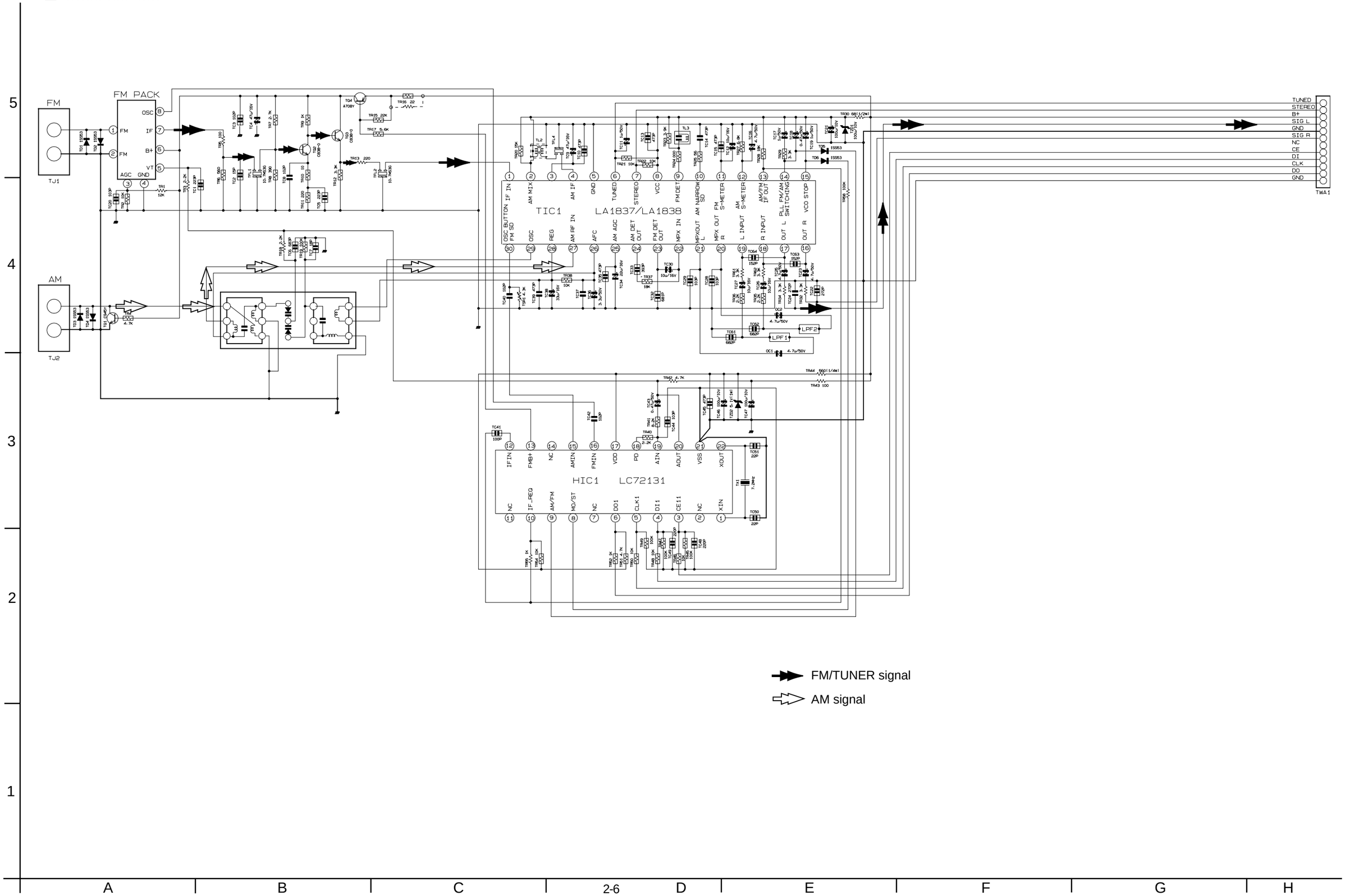

Printed circuit boards

■ Main board

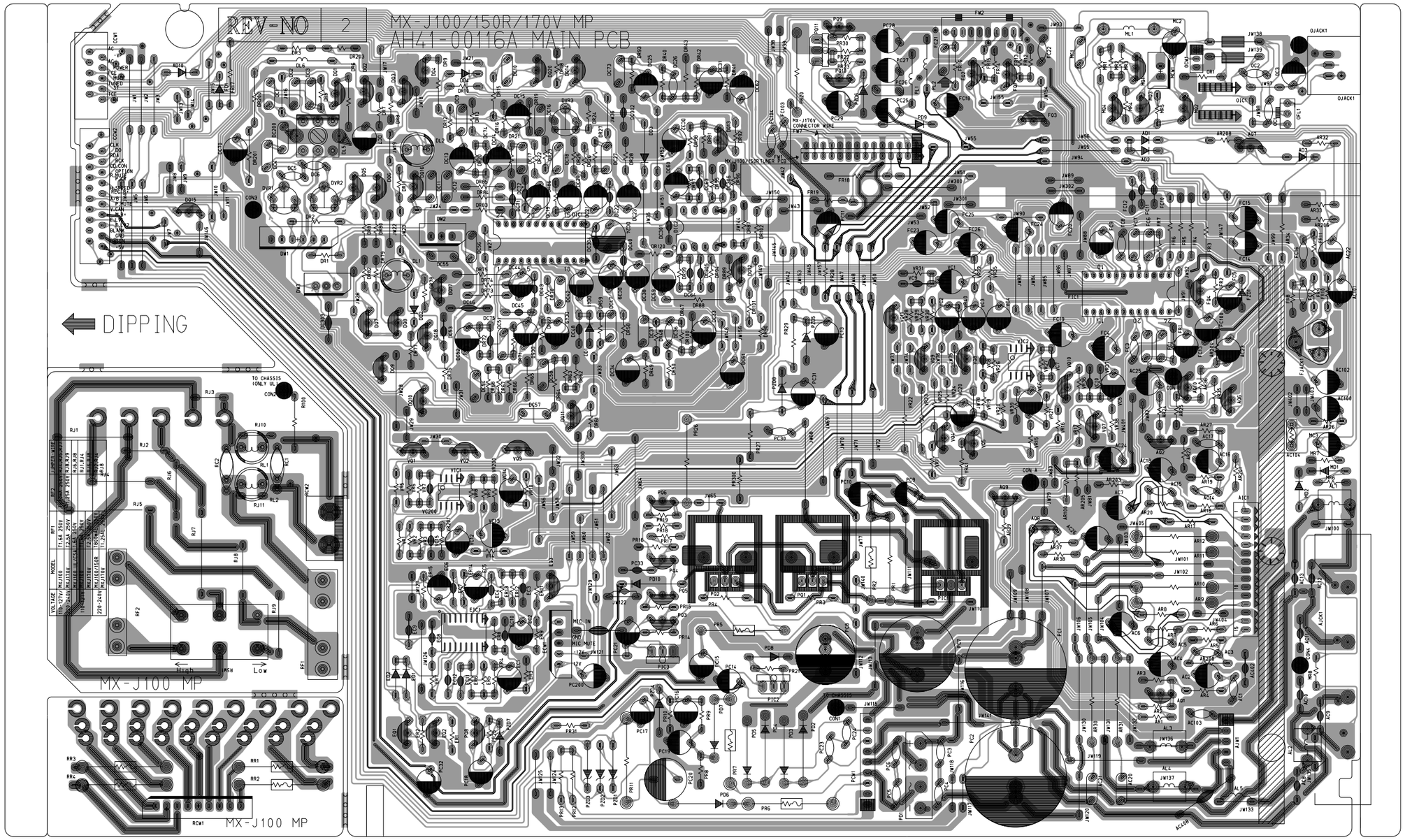

*** DIODE ***

AD1 (J5)
AD10 (B6)
AD2 (J5)
AD3 (K5)
DD1 (E4)
DD2 (D4)
DD3 (F5)
DD4 (D6)
ED1 (D1)
ED2 (D1)
FD1 (B6)
FZD1 (J4)
MD1 (K2)
MD2 (K2)
PD10 (E1)
PD2 (G0)
PD3 (G0)
PD4 (F0)
PD5 (F0)
PD6 (F0)
PD7 (F0)
PD8 (G1)
PD9 (H5)
PZD1 (E0)
PZD2 (E0)
PZD3 (E0)
PZD4 (F1)
PZD5 (G4)
PZD6 (G6)
PZD7 (D0)
PZD8 (G3)

*** IC&WAFER ***

AJW1 (J0)
DW1 (C4)
DW2 (D4)
ECW1 (E1)
FW1 (G5)
FW2 (H6)
FW7 (G5)
MCW1 (J6)
OCW1 (J6)
PCW1 (G0)
RCW1 (B0)

■ CD board

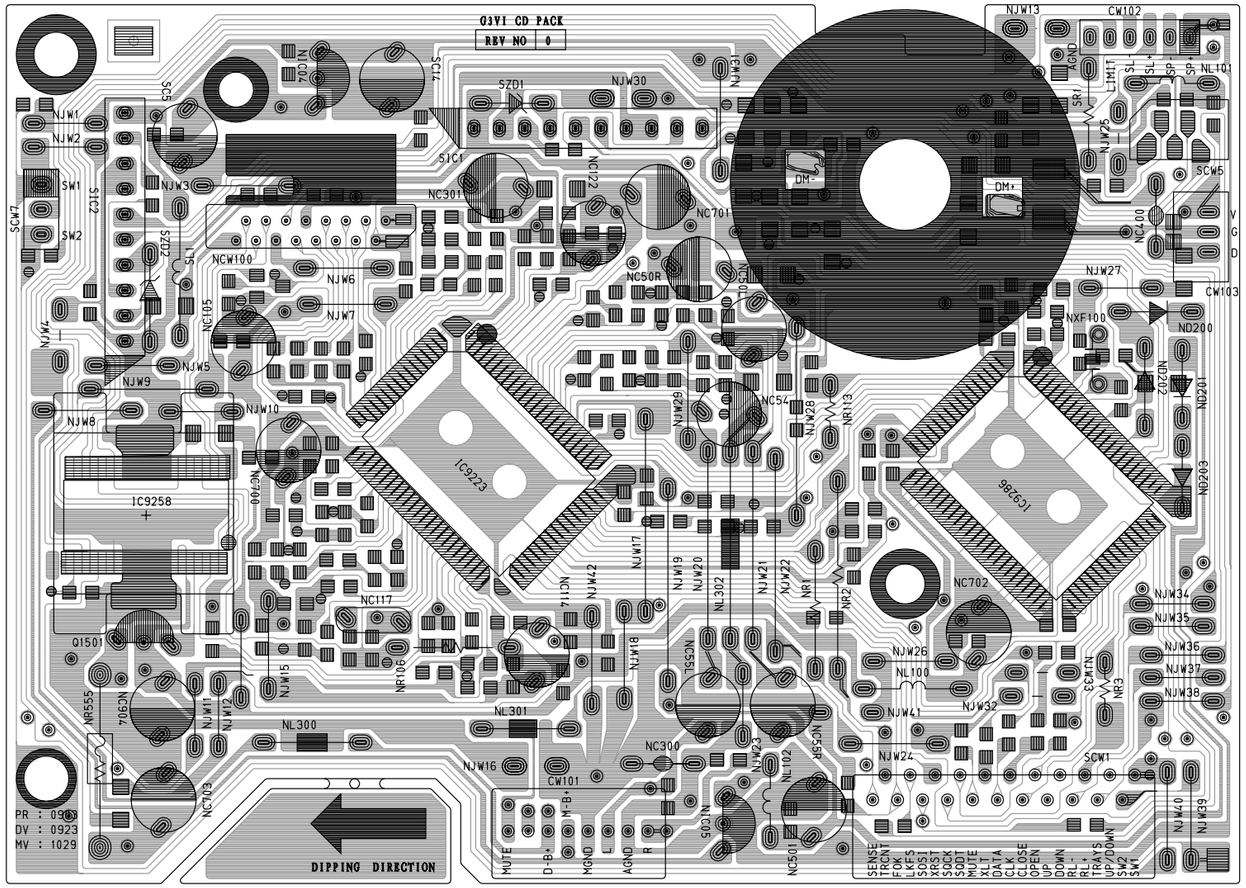

*** RESISTOR ***

NR1 (C0)
NR106 (B0)
NR113 (C1)
NR2 (C0)
NR3 (D0)
NR555 (A0)
SR1 (D2)

*** DIODE ***

ND201 (D1)
ND202 (D1)
ND203 (D1)
SZD1 (B2)
SZD2 (A1)

*** CONDENSER ***

NC105 (A1)
NC114 (B0)
NC117 (B0)
NC122 (B2)
NC300 (C0)
NC301 (B2)
NC400 (D1)
NC501 (C0)
NC50L (C1)
NC50R (C1)
NC54 (C1)
NC55L (C0)
NC55R (C0)
NC700 (A1)
NC701 (C2)
NC702 (D0)
NC703 (A0)
NC904 (A0)
SC5 (A2)

*** TR ***

NIC04 (B2)
NIC05 (C0)
Q1501 (A0)

*** IC&WAFER ***

CW101 (B0)
CW102 (D2)
CW103 (E1)
SCW7 (A2)
SIC1 (B2)
SIC2 (A1)

■ MIC / Headphone board

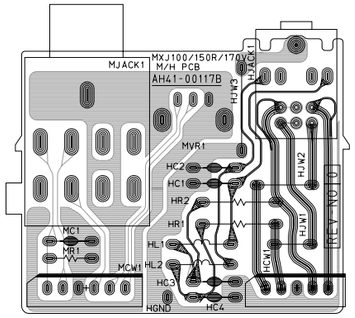

*** RESISTOR ***

HR1 (A0)
HR2 (A0)
MR1 (A0)

*** IC&WAFER ***

HCW1 (B0)
MCW1 (A0)

*** CONDENSER ***

HC1 (A0)
HC2 (A0)
HC3 (A0)
HC4 (A0)
MC1 (A0)

■ Front board

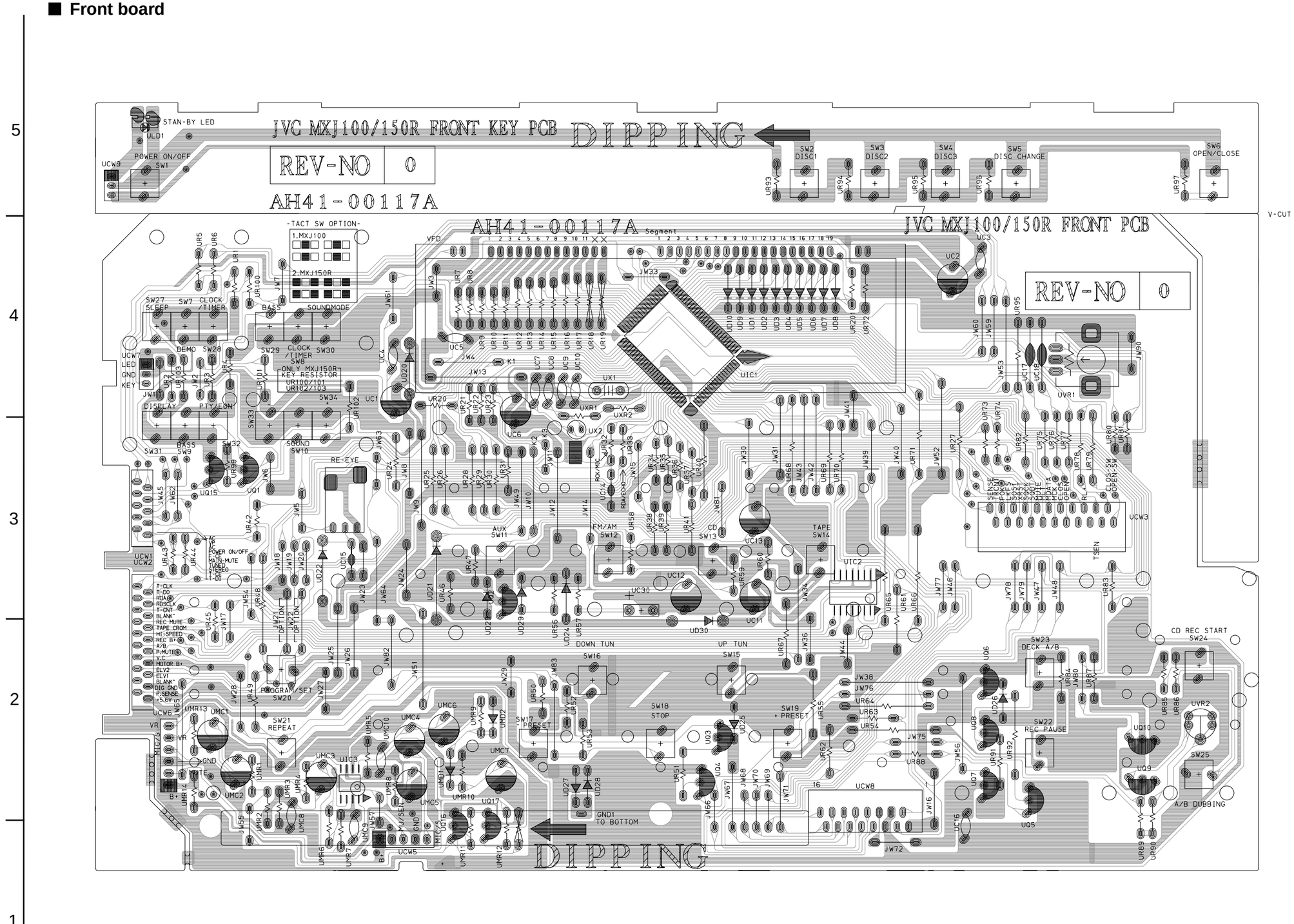

*** CONDENSER ***

UC1 (C3)
UC10 (D3)
UC11 (E2)
UC12 (E2)
UC13 (E2)
UC14 (D2)
UC15 (B2)
UC16 (G0)
UC17 (G3)
UC18 (G3)
UC2 (G4)
UC3 (G4)
UC4 (C3)
UC5 (C3)
UC6 (C3)
UC7 (D3)
UC8 (D3)
UC9 (D3)
UMC1 (A1)
UMC10 (C0)
UMC2 (A0)
UMC3 (B0)
UMC4 (C1)
UMC5 (C0)
UMC6 (C1)
UMC7 (C0)
UMC8 (B0)
UMC9 (B0)

*** DIODE ***

UD1 (E3)
UD10 (E3)
UD2 (E3)
UD20 (C3)
UD21 (C2)
UD22 (B2)
UD23 (C2)
UD24 (D2)
UD25 (E0)
UD26 (G1)
UD27 (D0)
UD28 (D0)
UD29 (D2)
UD3 (E3)
UD30 (E1)
UD4 (E3)
UD5 (E3)
UD6 (F3)
UD7 (F3)
UD8 (F3)
UD9 (E3)
UMD1 (C0)
UMD2 (C0)

*** TR ***

UQ1 (B2)
UQ10 (H0)
UQ15 (A2)
UQ16 (C0)
UQ17 (C0)
UQ2 (C1)
UQ3 (E1)
UQ4 (E0)
UQ5 (G0)
UQ6 (G1)
UQ7 (G0)
UQ8 (G1)
UQ9 (H0)

*** IC&WAFER ***

EIC2 (B0)
SW1 (A4)
SW10 (B3)
SW11 (C2)
SW12 (D2)
SW13 (E2)
SW14 (F2)
SW15 (E1)
SW16 (D1)
SW17 (D0)
SW18 (E0)
SW19 (E0)
SW2 (F4)
SW20 (B1)
SW21 (B0)
SW22 (G0)
SW23 (G1)
SW24 (H1)
SW25 (H0)
SW27 (A3)
SW28 (A3)
SW29 (B3)
SW3 (F4)
SW30 (B3)
SW31 (A3)
SW32 (A3)
SW33 (B3)
SW34 (B3)
SW4 (G4)
SW5 (G4)
SW6 (H4)
SW7 (A3)
SW8 (B3)
SW9 (A3)
UC30 (D1)
UCW5 (C0)
UCW6 (A0)
UCW7 (A3)
UCW9 (A4)
UIC1 (E3)

■ Tuner board

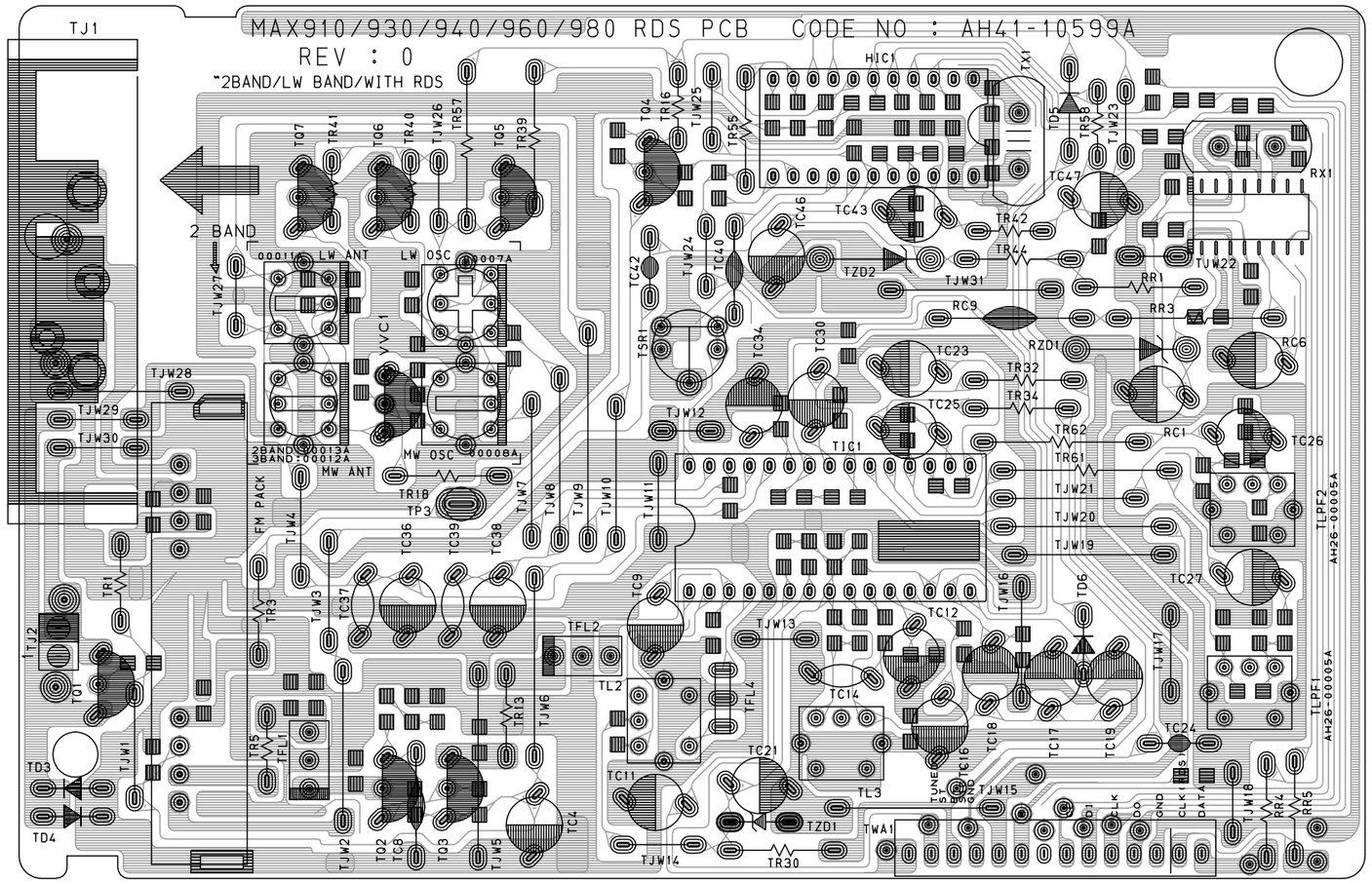

*** CONDENSER ***

RC9 (C1)
TC14 (C0)
TC24 (D0)
TC37 (B0)
TC39 (B0)
TC40 (C1)
TC42 (B1)
TC8 (B0)

*** IC&WAFER ***

TFL4 (C0)
TJ2 (A0)

*** DIODE ***

RZD1 (D1)
TD3 (A0)
TD4 (A0)
TD5 (D2)
TD6 (D0)
TZD1 (C0)
TZD2 (C1)

*** TR ***

TQ1 (A0)
TQ2 (B0)
TQ3 (B0)
TQ4 (B2)
TQ5 (B2)
TQ6 (B2)
TQ7 (A2)
VVC1 (B1)

PARTS LIST

[MX-J100]

* All printed circuit boards and its assemblies are not available as service parts.

Area suffix

B ---------- U.K.
E ---------- Continental Europe
EN ---------- Northern Europe
EV ---------- Eastern Europe
EE ---------- Russian

- Contents -

Exploded view of general assembly and parts list ---------- 3- 3
CD mechanism assembly and parts list ---------- 3- 5
CD changer mechanism assembly and parts list ---------- 3- 6
Cassette mechanism assembly and parts list ---------- 3- 8
Electrical parts list ---------- 3- 9
Packing materials and accessories parts list ---------- 3-19

-MEMO-

Exploded view of general assembly and parts list

Block No. M 1 M M

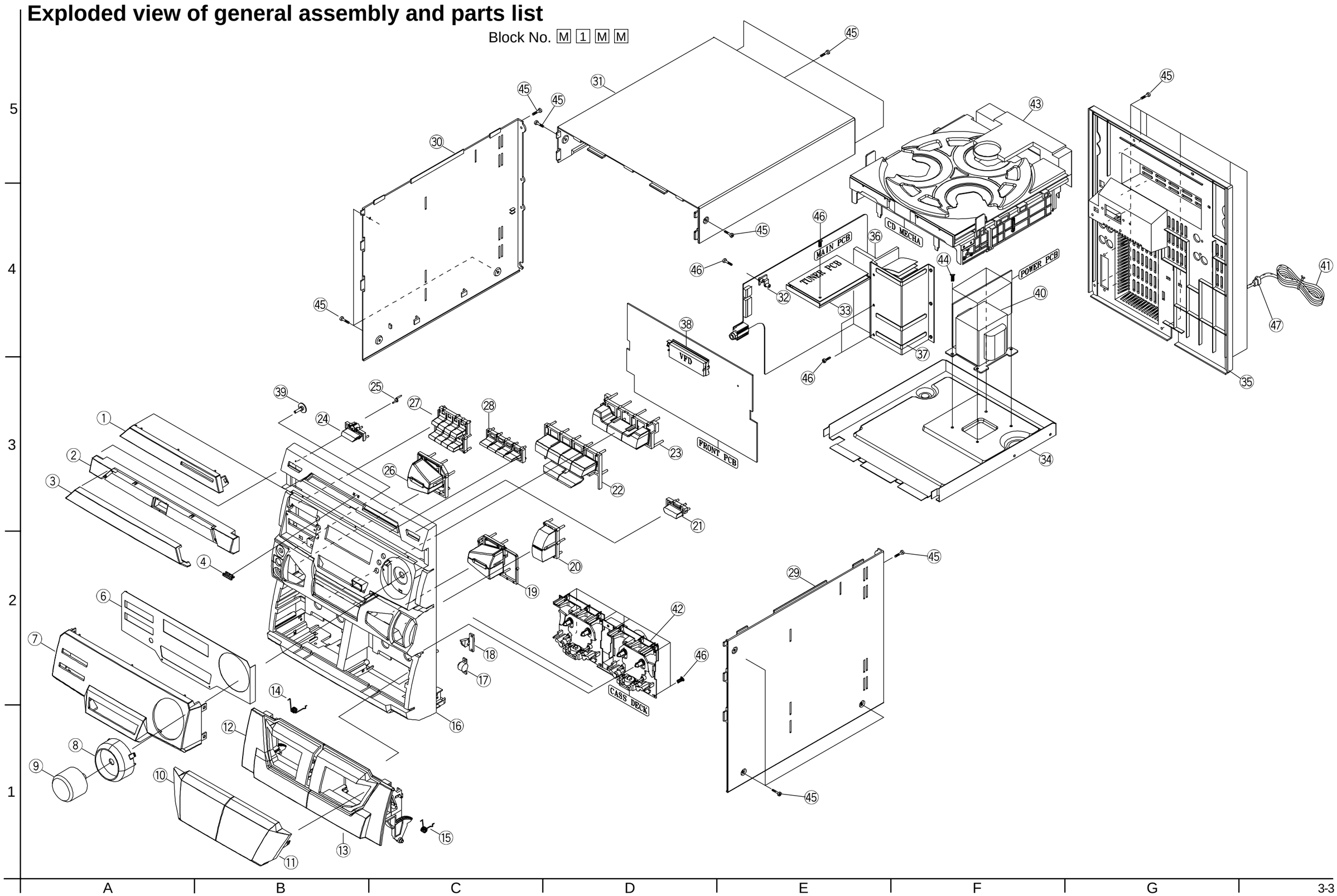

■ Parts list(General assembly)

Block No. M1MM

⚠	Item	Parts number	Parts name	Q'ty	Description	Area
	1	AH64-00426B	WINDOW-CD	1		
	2	AH64-00414B	DOOR-CD	1		
	3	AH64-00429B	WINDOW-DOOR CD	1		
	4	AH64-00462A	BADGE-JVC	1		
	6	AH63-00107A	SHEET-FRONT	1		
	7	AH64-00430B	WINDOW-VFD	1		
	8	AH61-00271B	CAP-VOLUME	1		
	9	AH64-00422B	KNOB-VOLUME	1		
	10	AH64-00427B	WINDOW-DOORA	1		
	11	AH64-00428B	WINDOW-DOORB	1		
	12	AH64-00412B	CASSETTE LID A	1		
	13	AH64-00413B	CASSETTE LID B	1		
	14	AH61-62004A	SPRING-EJECT A	1		
	15	AH61-62004B	SPRING-EJECT B	1		
	16	AH64-00364B	CABINET-FRONT	1		
	17	AH61-80030A	DAMPER-ASSY	2		
	18	AH59-50001A	LATCH-ASSY	2		
	19	AH64-00421B	KNOB-RECORD	1		
	20	AH64-00423B	KNOB-DUBBING	1		
	21	AH64-00420B	KNOB-CD OPEN	1		
	22	AH64-00415B	KNOB-FUNCTION	1		
	23	AH64-00418B	KNOB-PRESET	1		
	24	AH64-00425B	KNOB-POWER	1		
	25	AH67-00035A	LENS-POWER	1		
	26	AH64-00440B	KNOB-PROGRAM	1		
	27	AH64-00424A	KNOB-SLEEP	1		
	28	AH64-00416A	KNOB-DISC	1		
	29	AH64-00432A	CABINET-SIDE R	1		
	30	AH64-00431A	CABINET-SIDE L	1		
	31	AH64-00443A	CABNET-TOP	1		
	32	AH61-00021A	HOLDER-PCB	1		
	33	AH61-20540A	HOLDER-TUNER	1		
	34	AH64-30416A	CABINET-BOTTOM	1		
	35	AH64-00365B	CABINET-REAR	1		
	36	AH62-00023A	HEAT SINK-MAIN	1		
	37	AH61-00250A	BRKT-H/SINK	1		
	38	AH61-00252A	HOLDER-VFD	1		
	39	AH61-00380A	SHAFT-H/PHONE	1		
⚠	40	AH26-00054D	POWER TRANS	1		
⚠	41	QMP39F0-183JE		1		
⚠		QMP39F0-183JE		1		EE
⚠		QMP5520-183	POWER CORD	1		B
	42	----------	DECK CASEETTE	1		
	43	----------	CD MECHANISM	1		
	44	QYSBSF4008Z	TAPPING SCREW	4		
	45	QYSDSF3008N	TAPPING SCREW	19		
	46	QYSBSF3008Z	TAPPING SCREW	12		
⚠	47	QZW0033-001	STRAIN RELIEF	1		

-MEMO-

CD mechanism assembly and parts list

Block No. M 2 M M

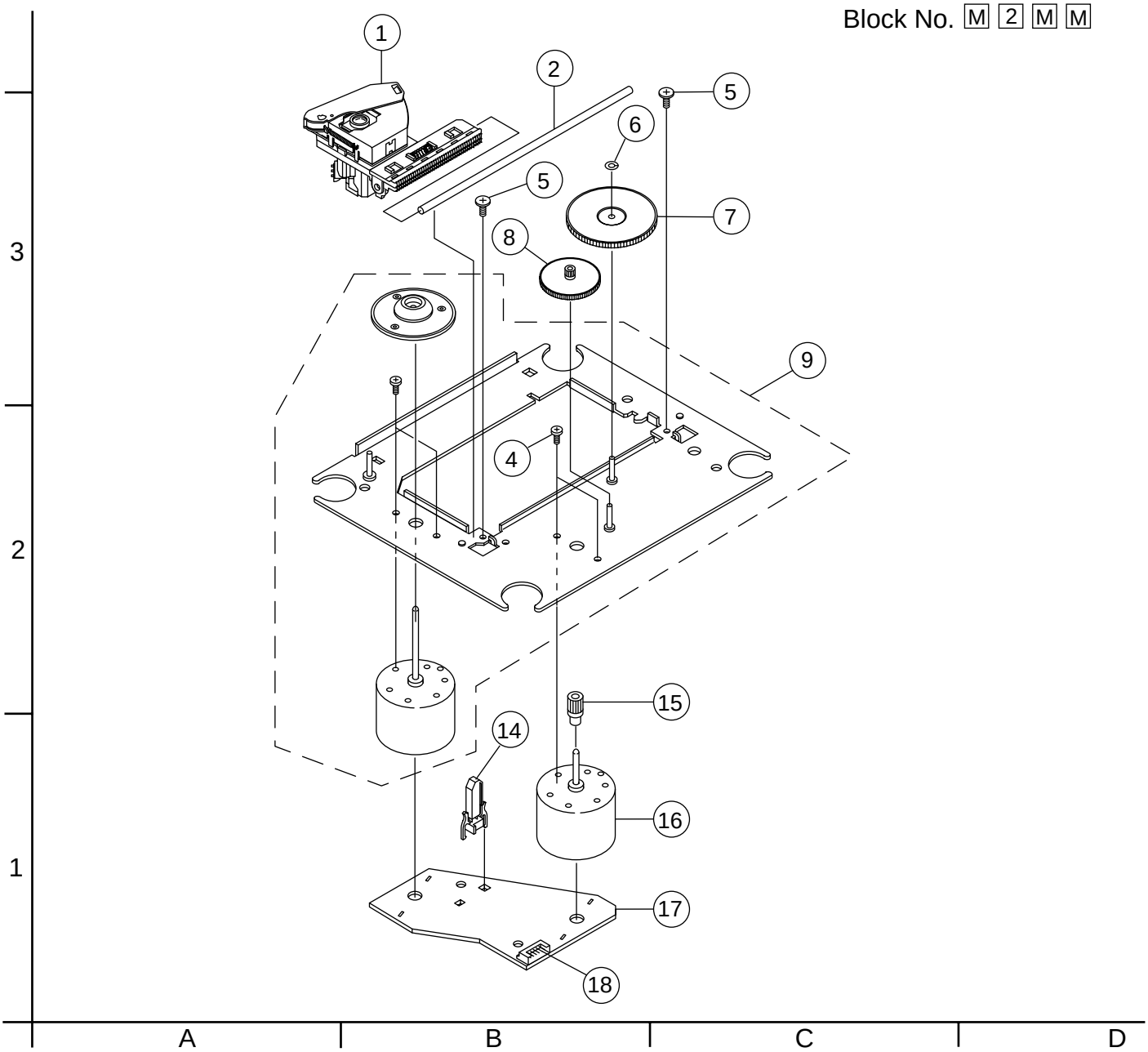

■ Parts list(CD mechanism)

Block No. M2MM

⚠	Item	Parts number	Parts name	Q'ty	Description	Area
	1	AH30-00007A	OPTICAL PICK-UP	1		
	2	AJ70-00601A	SHAFT-PU	1		
	4	AJ60-00601D	SCREW	2		
	5	6003-000294	SCREW	2	SHAFT	
	6	AJ60-00608A	WASHER	1	PLAIN	
	7	AJ66-00006A	GEAR(C)	1		
	8	AJ66-00005A	GEAR(B)	1		
	9	AH91-60150C	CHASSIS BASE	1		
	14	3409-001078	LEAF SWITCH	1		
	15	AJ66-00004A	GEAR(A)	1	FEED	
	16	AJ31-00601E	MOTOR-FEED	1		
	17	AJ41-00601S	MOTOR-PCB ASSY	1		
	18	AJ37-00601A	CONNECTOR	1		

CD changer mechanism assembly and parts list

Block No. M 3 M M

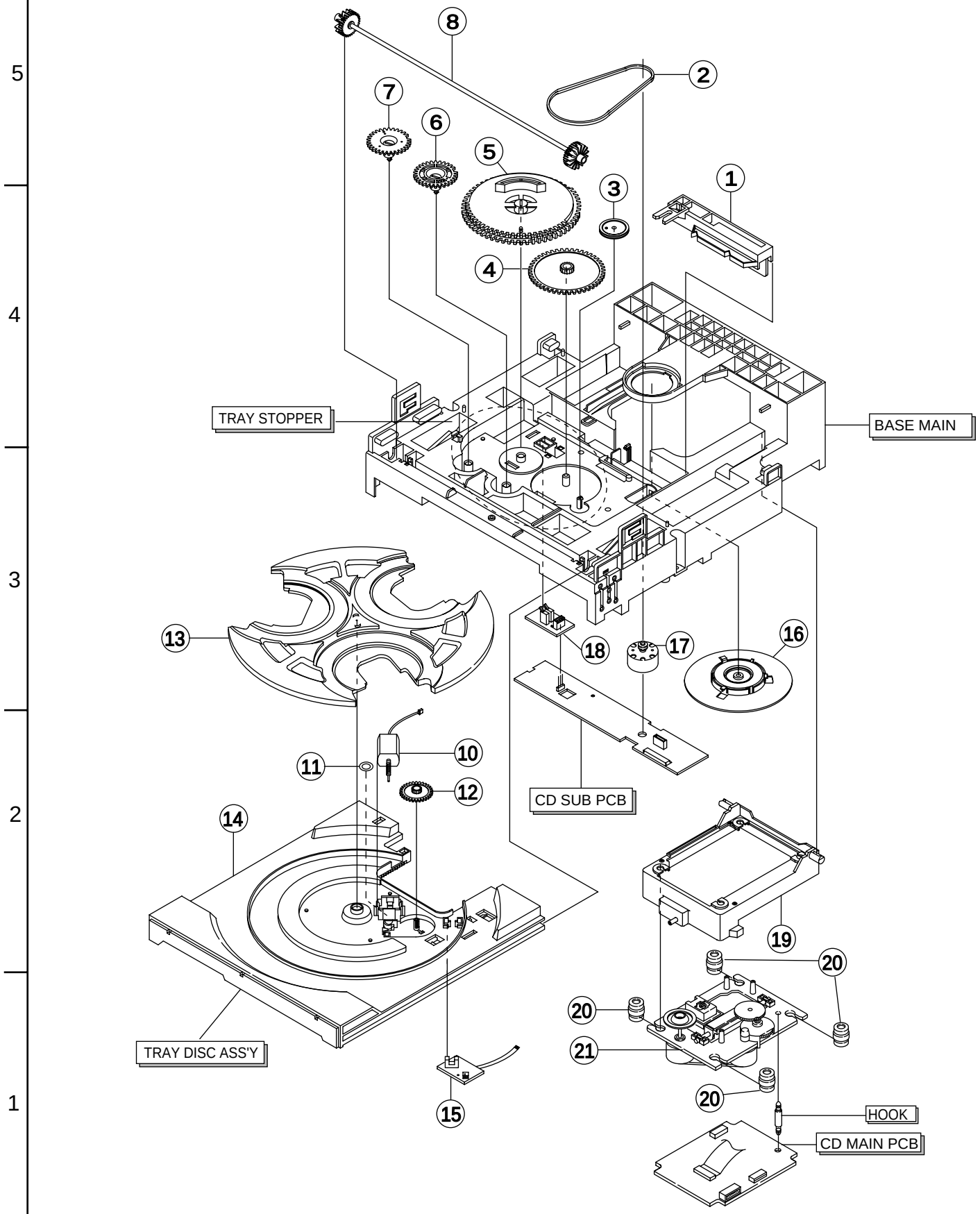

■ Parts list(CD changer mechanism)

Block No. M3MM

⚠	Item	Parts number	Parts name	Q'ty	Description	Area
	1	AH66-80022A	SLIDER CAM	1		
	2	AH66-60034A	ROAD BELT	1		
	3	AH66-20186A	PULLEY GEAR	1		
	4	AH66-20187A	ROAD GEAR	1		
	5	AH66-20188A	CAM GEAR	1		
	6	AH66-20189A	TRAY GEAR	1		
	7	AH66-20190A	CONVERT GEAR	1		
	8	AH66-20191A	SYNCRO GEAR	1		
	10	AH59-10098A	WORM-MOTOR ASSY	1		
	11	AH69-20044A	MOTOR CUSHION	1		
	12	AH66-20193A	ROULLETTE GEAR	1		
	13	AH66-90056A	ROULLETTE TRAY	1		
	14	AH66-90055A	DISK TRAY	1		
	15	AH59-10099A	SENSOR PCB ASSY	1		
	16	AH59-10100B	TABLE CHUCK ASS	1		
	17	AH59-10101A	MOTOR PULLY	1	ASS'Y PARTS	
	18	----------	SWITCH BOARD	1		
	19	AH66-30086A	LIFTER LEVER	1		
	20	AH73-10016A	RUBBER CUSHION	4		
	21	----------	CD MECHANISM	1		

Cassette mechanism assembly and parts list

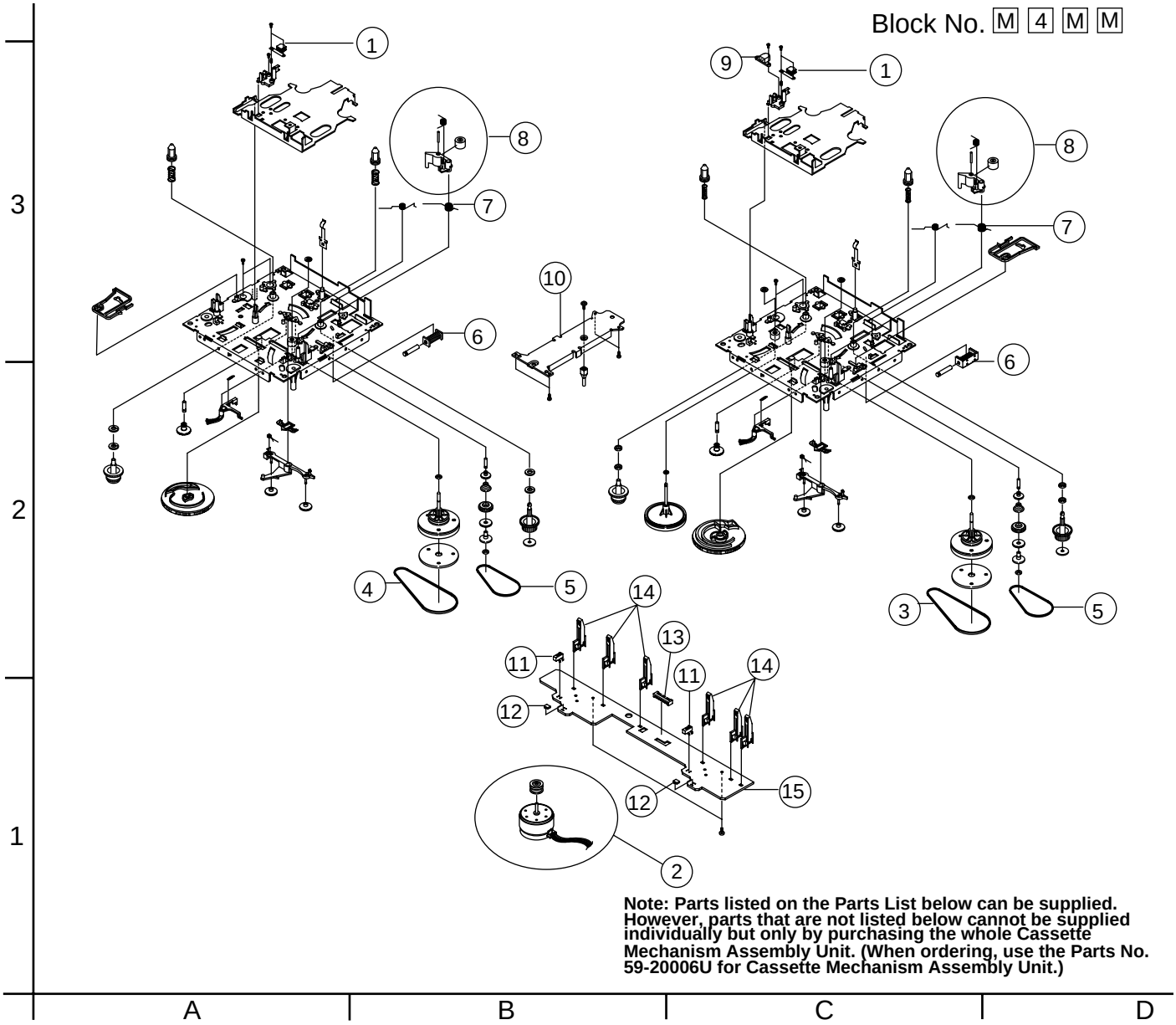

Note: Parts listed on the Parts List below can be supplied. However, parts that are not listed below cannot be supplied individually but only by purchasing the whole Cassette Mechanism Assembly Unit. (When ordering, use the Parts No. 59-20006U for Cassette Mechanism Assembly Unit.)

■ Parts list(Cassette mechanism)

Block No. M4MM

⚠	Item	Parts number	Parts name	Q'ty	Description	Area
	1	AH81-00141A	R/P HEAD	2	TC881CB	
	2	AH81-00142A	C.MOTOR ASS'Y	1	ADR2400-SHU2L	
	3	AH81-00143A	MAIN BELT 1	1	ADR2400-MAIN76.	
	4	AH81-00144A	MAIN BELT 2	1	ADR2400-MAIN64.	
	5	AH81-00101A	SUB BELT	2	ADR2400-FR34.7	
	6	AH81-00102A	SOLENOIDE	2	ADR2400-1	
	7	AH81-00282A	SPRING	2		
	8	AH81-00283A	PINCH LOLLER	2	ASS'Y PARTS	
	9	AH81-00284A	E-HEAD	1	TC2131F	
	10	AH81-00285A	MOTOR BRACKET	1		
	11	AH81-00286A	LEAF SWITCH	2	ADR2400-MODE	
	12	AH81-00287A	PHOTO SENSOR	2	ADR2400-SENSOR	
	13	AH81-00288A	CONNECTOR	1	ADR2400-16	
	14	AH81-00289A	LEAF SWITCH	6	ADR2400-MXS0022	
	15	AH81-00290A	P.C.BOARD	1		

Electrical parts list

■ **Electrical parts list (Main board)** **Block No. 01**

⚠	Item	Parts number	Parts name	Remarks	Area
	AC 1	2201-000557	C CAPACITOR		
	AC 2	2401-000419	E CAPACITOR		
	AC 3	2201-000368	C CAPACITOR		
	AC 4	2401-001164	E CAPACITOR		
	AC 5	2201-000659	C CAPACITOR		
	AC 6	2401-000357	E CAPACITOR		
	AC 7	2401-000357	E CAPACITOR		
	AC 8	2202-000817	C CAPACITOR		
	AC 10	2202-000854	C CAPACITOR		
	AC 11	2202-000854	C CAPACITOR		
	AC 13	2202-000817	C CAPACITOR		
	AC 14	2201-000368	C CAPACITOR		
	AC 15	2201-000659	C CAPACITOR		
	AC 16	2401-000419	E CAPACITOR		
	AC 17	2201-000557	C CAPACITOR		
	AC 18	2401-001164	E CAPACITOR		
	AC 20	2301-000375	C CAPACITOR		
	AC 21	2301-000375	C CAPACITOR		
	AC 22	2401-001092	E CAPACITOR		
	AC 23	2401-002180	E CAPACITOR		
	AC 24	2401-002180	E CAPACITOR		
	AC 25	2401-001889	E CAPACITOR		
	AC 26	2401-000871	E CAPACITOR		
	AC100	2401-001912	E CAPACITOR		
	AC102	2401-000419	E CAPACITOR		
	AD 1	1N4148	GE DIODE		
	AD 2	1N4148	GE DIODE		
	AD 3	1N4148	GE DIODE		
	AD 10	1N4148	GE DIODE		
	ADECK	AH39-20002D	CONNECTOR		
⚠	AIC 1	STK402-040	IC	POWER AMP	
	AJACK	3716-000209	TERMINAL BLOCK		
	AJW 1	AH39-00157D	LEAD-CONNECTOR		
	AL 1	AH27-90001A	COIL		E
	AL 2	AH27-90001A	COIL		E
	AL 3	AH27-90001A	COIL		E
	AL 4	AH27-90001A	COIL		E
	AO 1	KSD471-YTA	TRANSISTOR		
	AO 2	KSD471-YTA	TRANSISTOR		
	AO 6	KSR2003TA	TRANSISTOR		
	AO 7	KSA708-YTA	TRANSISTOR		
	AO 8	KSA928A	TRANSISTOR		
	AO 9	KSD471-YTA	TRANSISTOR		
	AO 10	KSD471-YTA	TRANSISTOR		
	AR 1	2001-000429	C RESISTOR		
	AR 2	2001-000773	C RESISTOR		
	AR 3	2001-000273	C RESISTOR		
	AR 4	2001-000281	C RESISTOR		
	AR 5	2001-000864	C RESISTOR		
	AR 6	2001-000924	C RESISTOR		
	AR 7	2001-000864	C RESISTOR		
	AR 8	2001-001153	C RESISTOR		
	AR 9	2003-000390	OM RESISTOR		
	AR 10	2003-000390	OM RESISTOR		
	AR 11	2003-000390	OM RESISTOR		
	AR 12	2003-000390	OM RESISTOR		
	AR 17	2001-000028	C RESISTOR		
	AR 18	2001-000890	C RESISTOR		
	AR 19	2001-000793	C RESISTOR		
	AR 20	2001-000864	C RESISTOR		
	AR 23	2001-000273	C RESISTOR		
	AR 24	2001-000429	C RESISTOR		
	AR 25	2001-000780	C RESISTOR		

	Item	Parts number	Parts name	Remarks	Area
	AR 26	2001-000290	C RESISTOR		
	AR 27	2001-000281	C RESISTOR		
	AR 30	2003-000689	OM RESISTOR		
	AR 31	2003-000689	OM RESISTOR		
	AR 32	2001-000290	C RESISTOR		
	AR 33	2001-000780	C RESISTOR		
	AR 34	2001-000429	C RESISTOR		
	AR 35	2001-000429	C RESISTOR		
	AR 36	2001-000440	C RESISTOR		
	AR 37	2001-000591	C RESISTOR		
	AR 38	2001-000429	C RESISTOR		
	AR 39	2001-000429	C RESISTOR		
	AR100	2001-000449	C RESISTOR		
	AR200	2001-000290	C RESISTOR		
	AR201	2001-000290	C RESISTOR		
	AR204	2001-000734	C RESISTOR		
	AR205	2001-000734	C RESISTOR		
	CCW 1	3710-001567	CONNECTOR		
	CCW 2	3710-001571	CONNECTOR		
	CON 1	AH39-50001L	LEAD-FASTEN		
	DC 1	2301-000412	C CAPACITOR		
	DC 2	2301-000379	C CAPACITOR		
	DC 3	2301-000404	C CAPACITOR		
	DC 4	2301-000442	C CAPACITOR		
	DC 5	2201-000368	C CAPACITOR		
	DC 6	2201-000368	C CAPACITOR		
	DC 7	2401-001912	E CAPACITOR		
	DC 9	2301-000390	C CAPACITOR		
	DC 10	2301-000379	C CAPACITOR		
	DC 11	2301-000370	C CAPACITOR		
	DC 12	2301-000370	C CAPACITOR		
	DC 13	2401-001022	E CAPACITOR		
	DC 14	2401-001511	E CAPACITOR		
	DC 15	2401-000240	E CAPACITOR		
	DC 16	2301-000474	C CAPACITOR		
	DC 17	2301-000393	C CAPACITOR		
	DC 18	2301-000375	C CAPACITOR		
	DC 19	2401-002180	E CAPACITOR		
	DC 20	2401-001954	E CAPACITOR		
	DC 21	2401-001022	E CAPACITOR		
	DC 22	2202-000781	C CAPACITOR		
	DC 23	2401-001511	E CAPACITOR		
	DC 24	2401-000795	E CAPACITOR		
	DC 25	2401-001022	E CAPACITOR		
	DC 26	2201-000674	C CAPACITOR		
	DC 27	2301-000400	C CAPACITOR		
	DC 31	2401-001080	E CAPACITOR		
	DC 32	2401-001022	E CAPACITOR		
	DC 33	2401-001912	E CAPACITOR		
	DC 34	2401-001080	E CAPACITOR		
	DC 36	2201-000674	C CAPACITOR		
	DC 37	2301-000407	C CAPACITOR		
	DC 38	2401-001022	E CAPACITOR		
	DC 39	2401-001511	E CAPACITOR		
	DC 40	2202-000781	C CAPACITOR		
	DC 41	2401-001022	E CAPACITOR		
	DC 42	2301-000375	C CAPACITOR		
	DC 43	2202-000781	C CAPACITOR		
	DC 44	2401-002180	E CAPACITOR		
	DC 45	2202-000781	C CAPACITOR		
	DC 47	2301-000400	C CAPACITOR		
	DC 48	2202-000796	C CAPACITOR		
	DC 49	2401-000240	E CAPACITOR		

■ Electrical parts list(Main board)

Block No. 01

⚠	Item	Parts number	Parts name	Remarks	Area
	DC 50	2401-001511	E CAPACITOR		
	DC 51	2301-000393	C CAPACITOR		
	DC 52	2401-001022	E CAPACITOR		
	DC 54	2301-000390	C CAPACITOR		
	DC 55	2301-000370	C CAPACITOR		
	DC 56	2301-000370	C CAPACITOR		
	DC 57	2301-000379	C CAPACITOR		
	DC 58	2301-000474	C CAPACITOR		
	DC 59	2401-000438	E CAPACITOR		
	DC 60	2401-000438	E CAPACITOR		
	DC 61	2401-001022	E CAPACITOR		
	DC 62	2401-001912	E CAPACITOR		
	DC 63	2202-000821	C CAPACITOR		
	DC 64	2202-000821	C CAPACITOR		
	DC 70	2401-001895	E CAPACITOR		
	DC 71	2202-000781	C CAPACITOR		
	DC 72	2202-000781	C CAPACITOR		
	DC 73	2301-000407	C CAPACITOR		
	DC 74	2202-000243	C CAPACITOR		
	DC 75	2202-000243	C CAPACITOR		
	DD 1	1N4148	GE DIODE		
	DD 2	1N4148	GE DIODE		
	DD 3	1N4148	GE DIODE		
	DD 4	1N4148	GE DIODE		
	DIC 1	KA22291	TRANSISTOR	PREAMP	
	DIC 2	KA4558	TRANSISTOR	OP AMP	
	DL 1	AH26-10002Y	COIL	BIAS-TRAP	
	DL 2	AH26-10002Y	COIL	BIAS-TRAP	
	DL 5	AH27-00018A	COIL	BAIS-OSC 85K	
	DO 1	KSC2331-Y-TA	TRANSISTOR		
	DO 2	KSA928A	TRANSISTOR		
	DO 3	KSC945-YTA	TRANSISTOR		
	DQ 4	KSR1003TA	TRANSISTOR		
	DO 5	KSC1008-YTA	TRANSISTOR		
	DO 6	KSC1008-YTA	TRANSISTOR		
	DO 7	KSC1008-YTA	TRANSISTOR		
	DO 8	KSC1008-YTA	TRANSISTOR		
	DQ 9	KSR2003TA	TRANSISTOR		
	DO 10	KSR1003TA	TRANSISTOR		
	DO 11	KSC945-YTA	TRANSISTOR		
	DO 12	KSC945-YTA	TRANSISTOR		
	DQ 13	KSC945-YTA	TRANSISTOR		
	DO 14	KSC945-YTA	TRANSISTOR		
	DO 15	KSR2003TA	TRANSISTOR		
	DO 16	KSC945-YTA	TRANSISTOR		
	DO 17	KSC945-YTA	TRANSISTOR		
	DQ 18	KSR2003TA	TRANSISTOR		
	DO 20	KSR1003TA	TRANSISTOR		
	DR 1	2001-000429	C RESISTOR		
	DR 2	2001-000440	C RESISTOR		
	DR 3	2001-000734	C RESISTOR		
	DR 5	2001-000290	C RESISTOR		
	DR 6	2001-001095	C RESISTOR		
	DR 7	2001-000786	C RESISTOR		
	DR 8	2001-000591	C RESISTOR		
	DR 9	2001-000290	C RESISTOR		
	DR 10	2001-000429	C RESISTOR		
	DR 11	2001-000708	C RESISTOR		
	DR 12	2001-000924	C RESISTOR		
	DR 13	2001-000005	C RESISTOR		
	DR 15	2001-000290	C RESISTOR		
	DR 16	2001-000290	C RESISTOR		
	DR 18	2001-000734	C RESISTOR		

⚠	Item	Parts number	Parts name	Remarks	Area
	DR 19	2001-000290	C RESISTOR		
	DR 20	2001-000924	C RESISTOR		
	DR 21	2001-000331	C RESISTOR	RN 1/8T 180K-J	
	DR 22	2001-000864	C RESISTOR		
	DR 23	2001-000003	C RESISTOR		
	DR 24	2001-000786	C RESISTOR		
	DR 25	2001-000890	C RESISTOR		
	DR 26	2001-000702	C RESISTOR		
	DR 27	2001-000325	C RESISTOR		
	DR 28	2001-000290	C RESISTOR		
	DR 40	2001-000449	C RESISTOR		
	DR 41	2001-000734	C RESISTOR		
	DR 42	2001-000591	C RESISTOR		
	DR 43	2001-000258	C RESISTOR		
	DR 47	2001-000522	C RESISTOR		
	DR 48	2001-000591	C RESISTOR		
	DR 49	2001-000734	C RESISTOR		
	DR 50	2001-000613	C RESISTOR		
	DR 58	2001-000325	C RESISTOR		
	DR 59	2001-000331	C RESISTOR		
	DR 61	2001-000734	C RESISTOR		
	DR 62	2001-000786	C RESISTOR		
	DR 63	2001-000591	C RESISTOR		
	DR 64	2001-000290	C RESISTOR		
	DR 65	2001-000429	C RESISTOR		
	DR 66	2001-000003	C RESISTOR		
	DR 67	2001-000924	C RESISTOR		
	DR 68	2001-000290	C RESISTOR		
	DR 69	2001-000331	C RESISTOR		
	DR 70	2001-000003	C RESISTOR		
	DR 71	2001-000397	C RESISTOR	RN 1/8T 180K-J	
	DR 72	2001-000977	C RESISTOR		
	DR 73	2001-000449	C RESISTOR		
	DR 74	2001-000786	C RESISTOR		
	DR 75	2001-000449	C RESISTOR		
	DR 76	2001-000429	C RESISTOR		
	DR 77	2001-000522	C RESISTOR		
	DR 78	2001-000734	C RESISTOR		
	DR 79	2001-000449	C RESISTOR		
	DR 80	2001-000449	C RESISTOR		
	DR 81	2001-000449	C RESISTOR		
	DR 82	2001-000449	C RESISTOR		
	DR 83	2001-000449	C RESISTOR		
	DR 84	2001-000449	C RESISTOR		
	DR 85	2001-000786	C RESISTOR		
	DR 86	2001-000734	C RESISTOR		
	DR 87	2001-000522	C RESISTOR		
	DR 88	2001-000449	C RESISTOR		
	DR 89	2001-000008	C RESISTOR		
	DR 90	2001-000591	C RESISTOR		
	DR 91	2001-000008	C RESISTOR		
	DR 92	2001-000591	C RESISTOR		
	DR 93	2001-000591	C RESISTOR		
	DR 94	2001-000864	C RESISTOR		
	DR 95	2001-000449	C RESISTOR		
	DR 96	2001-000864	C RESISTOR		
	DR 97	2001-000525	C RESISTOR		
	DR 98	2001-000449	C RESISTOR		
	DR 99	2001-000563	C RESISTOR		
	DR100	2001-000258	C RESISTOR		
	DR101	2001-000281	C RESISTOR		
	DR102	2001-000281	C RESISTOR		
	DVR 1	2103-000248	SEMI F.VR.		

■ Electrical parts list(Main board)

Block No. 01

⚠	Item	Parts number	Parts name	Remarks	Area
	DVR 2	2103-000248	SEMI F.VR.		
	DVR 3	2103-000492	SEMI F.VR.		
	DW 1	3711-003111	CONNECTOR		
	DW 2	3711-003107	CONNECTOR		
	DW 3	3711-003107	CONNECTOR		
	EC 6	2401-000907	E CAPACITOR		
	FC 1	2301-000375	C CAPACITOR		
	FC 2	2301-000375	C CAPACITOR		
	FC 3	2201-000928	C CAPACITOR		
	FC 4	2401-001912	E CAPACITOR		
	FC 5	2401-001511	E CAPACITOR		
	FC 7	2301-000375	C CAPACITOR		
	FC 8	2201-000928	C CAPACITOR		
	FC 9	2401-001912	E CAPACITOR		
	FC 10	2202-000781	C CAPACITOR		
	FC 11	2301-000375	C CAPACITOR		
	FC 12	2202-000781	C CAPACITOR		
	FC 14	2401-001912	E CAPACITOR		
	FC 15	2401-001912	E CAPACITOR		
	FC 16	2201-000368	C CAPACITOR		
	FC 17	2201-000368	C CAPACITOR		
	FC 18	2401-001954	E CAPACITOR		
	FC 19	2401-001912	E CAPACITOR		
	FC 20	2401-001912	E CAPACITOR		
	FC 21	2301-000379	C CAPACITOR		
	FC 22	2201-000504	C CAPACITOR		
	FC 23	2401-001912	E CAPACITOR		
	FC 24	2401-001912	E CAPACITOR		
	FC 25	2401-001912	E CAPACITOR		
	FC 26	2401-001912	E CAPACITOR		
	FD 1	1N4148	GE DIODE		
	FIC 1	LC75341	IC	VOLUME/TONE CON	
	FJACK	3722-000377	JACK-RCA	4P/2C	
	FO 1	KSR1009TA	TRANSISTOR		
	FO 2	KSR1009TA	TRANSISTOR		
	FO 3	KSR2003TA	TRANSISTOR		
	FO 4	KSD471-YTA	TRANSISTOR		
	FR 1	2001-000613	C RESISTOR		
	FR 2	2001-000241	C RESISTOR		
	FR 3	2001-000023	C RESISTOR		
	FR 4	2001-000281	C RESISTOR		
	FR 5	2001-000281	C RESISTOR		
	FR 6	2001-000281	C RESISTOR		
	FR 7	2001-000613	C RESISTOR		
	FR 8	2001-000411	C RESISTOR		
	FR 9	2001-000008	C RESISTOR		
	FR 11	2001-000397	C RESISTOR		
	FR 12	2001-000786	C RESISTOR		
	FR 13	2001-000613	C RESISTOR		
	FR 14	2001-000786	C RESISTOR		
	FR 15	2001-000702	C RESISTOR		
	FR 16	2001-000429	C RESISTOR		
	FR 17	2001-000429	C RESISTOR		
	FR 18	2001-000977	C RESISTOR		
	FR 19	2001-000221	C RESISTOR		
	FW 1	3711-004109	CONNECTOR		
	FW 2	3711-002809	CONNECTOR		
	PC 1	2401-002592	E CAPACITOR		
	PC 2	2401-002592	E CAPACITOR		
	PC 3	2201-000783	C CAPACITOR		
	PC 4	2201-000783	C CAPACITOR		
	PC 5	2201-000783	C CAPACITOR		
	PC 6	2201-000783	C CAPACITOR		

⚠	Item	Parts number	Parts name	Remarks	Area
	PC 7	2401-003116	E CAPACITOR		
	PC 8	2401-001413	E CAPACITOR		
	PC 9	2401-001954	E CAPACITOR		
	PC 10	2401-001954	E CAPACITOR		
	PC 11	2401-001895	E CAPACITOR		
	PC 13	2401-001895	E CAPACITOR		
	PC 14	2401-001954	E CAPACITOR		
	PC 15	2401-001954	E CAPACITOR		
	PC 16	2401-001912	E CAPACITOR		
	PC 17	2401-000475	E CAPACITOR		
	PC 18	2401-001511	E CAPACITOR		
	PC 19	2401-000475	E CAPACITOR		
	PC 20	2401-000230	E CAPACITOR		
	PC 21	2401-001954	E CAPACITOR		
	PC 23	2201-000783	C CAPACITOR		
	PC 24	2201-000783	C CAPACITOR		
	PC 25	2401-001538	E CAPACITOR		
	PC 26	2401-001538	E CAPACITOR		
	PC 27	2301-000449	C CAPACITOR		
	PC 28	2401-000795	E CAPACITOR		
	PC 29	2401-001511	E CAPACITOR		
	PC 30	2201-000565	C CAPACITOR		
	PC 31	2401-001895	E CAPACITOR		
	PC 32	2401-001895	E CAPACITOR		
	PC 33	2202-000797	C CAPACITOR		
	PCW 1	AH39-00144A	LEAD-CONNECTOR	9P	
	PD 2	1N5392	DIODE		
	PD 3	1N5392	DIODE		
	PD 4	1N5392	DIODE		
	PD 5	1N5392	DIODE		
	PD 6	1N4002	DIODE		
	PD 7	1N4002	DIODE		
	PD 8	1N4002	DIODE		
	PD 9	1N5392	DIODE		
	PD 10	1N5392	DIODE		
	PIC 1	KA7812-ABC	IC	REGULATOR	
⚠	PIC 2	KA7805-AB	IC	REGULATOR +	
	PIC 3	KA7912-AB	IC	REGULATOR -	
	PL 1	2701-000116	INDUCTOR-AXIAL		
	PL 2	2701-000298	INDUCTOR-AXIAL	AX470UH	
⚠	PQ 1	2SB1566/EF/	TRANSISTOR	POWER	
⚠	PQ 2	2SB1566/EF/	TRANSISTOR	POWER	
	PQ 3	KSC1009-YTA	TRANSISTOR		
	PQ 4	KSC945-YTA	TRANSISTOR		
	PQ 5	KSA708-YTA	TRANSISTOR		
	PQ 6	KSA928A	TRANSISTOR		
	PQ 9	KSR1003TA	TRANSISTOR		
	PQ 10	KSA708-YTA	TRANSISTOR		
⚠	PQ 11	KTC4369-Y	TRANSISTOR	POWER	
⚠	PR 1	2003-000690	OM RESISTOR		
	PR 3	2001-000786	C RESISTOR		
	PR 4	2001-000793	C RESISTOR		
⚠	PR 5	2008-000135	FUSE RESISTOR		
⚠	PR 6	2008-000135	FUSE RESISTOR		
⚠	PR 7	2008-000135	FUSE RESISTOR		
	PR 8	2001-000890	C RESISTOR		
	PR 9	2001-000613	C RESISTOR		
	PR 10	2001-000734	C RESISTOR		
	PR 11	2003-000701	OM RESISTOR		
	PR 12	2001-001096	C RESISTOR		
	PR 13	2001-001153	C RESISTOR		
	PR 14	2001-000290	C RESISTOR		
	PR 15	2001-000522	C RESISTOR		

■ **Electrical parts list(Main board)** **Block No. 01**

⚠	Item	Parts number	Parts name	Remarks	Area
	PR 16	2001-000786	C RESISTOR		
	PR 17	2001-000734	C RESISTOR		
	PR 18	2001-000977	C RESISTOR		
	PR 19	2001-000290	C RESISTOR		
⚠	PR 20	2003-000690	OM RESISTOR		
	PR 21	2001-000290	C RESISTOR		
	PR 22	2001-000522	C RESISTOR		
	PR 23	2001-000780	C RESISTOR		
	PR 26	2003-000468	OM RESISTOR		
	PR 27	2001-000027	C RESISTOR		
	PZD 1	TZP16A	ZENER DIODE		
	PZD 2	TZP16A	ZENER DIODE		
	PZD 3	UZP5.6B	ZENER DIODE		
	PZD 4	UZ5.1BSB	ZENER DIODE		
	PZD 5	UZP10B	ZENER DIODE		
	PZD 6	UZP10B	ZENER DIODE		
	PZD 8	UZP10B	ZENER DIODE		
⚠	RC 1	2201-000546	C CAPACITOR		
	RCW 1	3711-001167	CONNECTOR	BOX 9P	
	RCW 2	3711-000190	CONNECTOR		
⚠	RF 1	3601-001204	FUSE	GMC-1.6A	
⚠	RR 1	2008-000135	FUSE RESISTOR		
⚠	RR 2	2008-000135	FUSE RESISTOR		
⚠	RR 3	2008-000137	FUSE RESISTOR		
⚠	RR 4	2008-000137	FUSE RESISTOR		
	RUCL1	3602-000147	FUSE CLIP		
	TO CH	AH39-50001L	LEAD-FASTEN		
	VR 32	2001-000786	C RESISTOR		
	VR 35	2001-000786	C RESISTOR		

■ Electrical parts list(Tuner board)

Block No. 02

⚠	Item	Parts number	Parts name	Remarks	Area
	ANT	AH27-00012A	OSC COIL		
	FMPAK	AH40-00003A	TUNER PACK		
	HIC 1	LC72131D	IC	PLL	
	HR 1	2007-000586	CHIP RESISTOR		
	JW100	2007-000029	CHIP RESISTOR		
	OSC	AH27-00008A	OSC COIL		
	TC 1	2203-000609	C CAPASITOR		
	TC 2	2203-001517	C CAPASITOR		
	TC 3	2203-000260	C CAPASITOR		
	TC 4	2401-001975	C CAPACITOR		
	TC 5	2203-000609	C CAPASITOR		
	TC 6	2203-000979	C CAPASITOR		
	TC 7	2203-000429	C CAPASITOR		
	TC 9	2401-001975	C CAPACITOR		
	TC 10	2203-000979	C CAPASITOR		
	TC 11	2401-001912	E CAPACITOR		
	TC 12	2401-000419	E CAPACITOR		
	TC 13	2203-000979	C CAPASITOR		
	TC 14	2201-000565	C CAPACITOR		
	TC 15	2203-000979	C CAPASITOR		
	TC 16	2401-001954	E CAPACITOR		
	TC 17	2401-001912	E CAPACITOR		
	TC 18	2401-001968	C CAPACITOR		
	TC 19	2401-001912	E CAPACITOR		
	TC 20	2203-000260	C CAPASITOR		
	TC 21	2401-000240	E CAPACITOR		
	TC 23	2401-001954	E CAPACITOR		
	TC 25	2401-001954	E CAPACITOR		
	TC 26	2401-000419	E CAPACITOR		
	TC 27	2401-000419	E CAPACITOR		
	TC 28	2203-000260	C CAPASITOR		
	TC 29	2203-000260	C CAPASITOR		
	TC 30	2401-000419	E CAPACITOR		
	TC 32	2203-001132	C CAPASITOR		
	TC 33	2203-000844	C CAPASITOR		
	TC 34	2401-000907	E CAPACITOR		
	TC 35	2203-000979	C CAPASITOR		
	TC 36	2401-001022	E CAPACITOR		
	TC 38	2401-001164	E CAPACITOR		
	TC 39	2201-000565	C CAPACITOR		
	TC 40	2202-000796	C CAPACITOR		
	TC 41	2203-000239	C CAPASITOR		
	TC 42	2202-000796	C CAPACITOR		
	TC 43	2401-001968	C CAPACITOR		
	TC 44	2203-000260	C CAPASITOR		
	TC 45	2203-000979	C CAPASITOR		
	TC 46	2401-000240	E CAPACITOR		
	TC 47	2401-001895	E CAPACITOR		
	TC 48	2202-000807	C CAPASITOR		
	TC 50	2203-001611	C CAPASITOR		
	TC 51	2203-001611	C CAPASITOR		
	TC 61	2203-001105	C CAPASITOR		
	TC 62	2203-001105	C CAPASITOR		
	TC 63	2203-001551	C CAPASITOR		
	TC 64	2203-001551	C CAPASITOR		
	TC100	2201-000389	C CAPACITOR		
	TD 3	1N4148	GE DIODE		
	TD 4	1N4148	GE DIODE		
	TD 5	1N4148	GE DIODE		
	TD 6	1N4148	GE DIODE		
	TFL 1	2903-000119	CERAMIC FILTER	SFE10.7MJA-10-A	
	TFL 2	2903-000105	CERAMIC FILTER	10.7MHZ	
	TFL 4	14529-304-610	CERAMIC FILTER	AHCM2-450BL	

⚠	Item	Parts number	Parts name	Remarks	Area
	TIC 1	LA1837	IC		
	TJ 1	3716-000210	ANT TARMINAL		
	TJ 2	3711-000814	CONNECTOR		
	TJW41	2007-000029	CHIP RESISTOR		
	TJW42	2007-000029	CHIP RESISTOR		
	TL 2	AH26-10001E	IFT		
	TL 3	AH26-10020A	TRANS DET		
	TLPF1	AH26-00005A	IFT		
	TLPF2	AH26-00005A	IFT		
	TO 1	KSC945-YTA	TRANSISTOR		
	TO 2	KSC838-OTA	TRANSISTOR		
	TO 3	KSC838-OTA	TRANSISTOR		
	TO 4	KSA708-YTA	TRANSISTOR		
	TR 1	2001-000331	C RESISTOR		
	TR 2	2007-000300	CHIP RESISTOR		
	TR 3	2001-000449	C RESISTOR		
	TR 4	2007-000872	CHIP RESISTOR		
	TR 5	2001-000281	C RESISTOR		
	TR 6	2007-000030	CHIP RESISTOR		
	TR 7	2007-000518	CHIP RESISTOR		
	TR 8	2007-000822	CHIP RESISTOR		
	TR 9	2007-000468	CHIP RESISTOR		
	TR 10	2007-000308	CHIP RESISTOR		
	TR 11	2007-000572	CHIP RESISTOR		
	TR 12	2007-000686	CHIP RESISTOR		
	TR 13	2001-000515	C RESISTOR		
	TR 15	2007-000586	CHIP RESISTOR		
	TR 16	2001-000527	C RESISTOR		
	TR 17	2007-000981	CHIP RESISTOR		
	TR 18	2001-000449	C RESISTOR		
	TR 19	2007-000282	CHIP RESISTOR		
	TR 20	2007-000409	CHIP RESISTOR		
	TR 21	2007-000300	CHIP RESISTOR		
	TR 22	2007-000300	CHIP RESISTOR		
	TR 23	2007-000710	CHIP RESISTOR		
	TR 24	2007-000290	CHIP RESISTOR		
	TR 25	2007-001043	CHIP RESISTOR		
	TR 27	2007-001071	CHIP RESISTOR		
	TR 28	2007-000457	CHIP RESISTOR		
	TR 29	2007-000686	CHIP RESISTOR		
	TR 30	2001-000117	C RESISTOR		
	TR 32	2001-000429	C RESISTOR		
	TR 34	2001-000429	C RESISTOR		
	TR 35	2007-000493	CHIP RESISTOR		
	TR 36	2007-000493	CHIP RESISTOR		
	TR 37	2007-000586	CHIP RESISTOR		
	TR 38	2007-001177	CHIP RESISTOR		
	TR 39	2001-000290	C RESISTOR		
	TR 40	2001-000522	C RESISTOR		
	TR 41	2001-000522	C RESISTOR		
	TR 42	2001-000734	C RESISTOR		
	TR 43	2007-000290	CHIP RESISTOR		
	TR 44	2001-000118	C RESISTOR		
	TR 45	2007-000282	CHIP RESISTOR		
	TR 46	2007-000300	CHIP RESISTOR		
	TR 47	2007-000282	CHIP RESISTOR		
	TR 48	2007-000300	CHIP RESISTOR		
	TR 49	2007-000282	CHIP RESISTOR		
	TR 50	2007-000300	CHIP RESISTOR		
	TR 51	2007-000872	CHIP RESISTOR		
	TR 52	2007-000468	CHIP RESISTOR		
	TR 53	2007-000300	CHIP RESISTOR		
	TR 54	2007-000300	CHIP RESISTOR		

■ **Electrical parts list(Tuner board)** **Block No. 02**

⚠	Item	Parts number	Parts name	Remarks	Area
	TR 55	2001-000429	C RESISTOR		
	TR 56	2007-000300	CHIP RESISTOR		
	TR 57	2001-000290	C RESISTOR		
	TR 58	2001-000273	C RESISTOR		
	TR 61	2001-000591	C RESISTOR		
	TR 62	2001-000591	C RESISTOR		
	TR100	2001-000527	C RESISTOR		
	TR101	2007-000033	CHIP RESISTOR		
	TR102	2007-000033	CHIP RESISTOR		
	TR103	2007-000033	CHIP RESISTOR		
	TR104	2007-000033	CHIP RESISTOR		
	TR105	2007-000029	CHIP RESISTOR		
	TSR 1	2103-000290	VR-SEMI F.VR		
	TWA 1	3710-001421	C/SOCKET	14P	
	TX 1	2801-000734	CRYSTAL UNIT	7.2MHZ	
	TZD 1	UZ7.5BSC	ZENER DIODE	7.5V	
	TZD 2	UZP5.1B	ZENER DIODE	5.1V	
	VVC 1	KV1260	VARI-CAPA		

■ Electrical parts list(Front board)

Block No. 03

⚠	Item	Parts number	Parts name	Remarks	Area
	GND 1	AH39-50001L	LEAD-FASTEN		
	REEYE	GP1U281R	IFR DETECT UNIT		
	SW 1	3404-000165	TACT SWITCH		
	SW 2	3404-000165	TACT SWITCH		
	SW 3	3404-000165	TACT SWITCH		
	SW 4	3404-000165	TACT SWITCH		
	SW 5	3404-000165	TACT SWITCH		
	SW 6	3404-000165	TACT SWITCH		
	SW 7	3404-000165	TACT SWITCH		
	SW 8	3404-000165	TACT SWITCH		
	SW 9	3404-000165	TACT SWITCH		
	SW 10	3404-000165	TACT SWITCH		
	SW 11	3404-000165	TACT SWITCH		
	SW 12	3404-000165	TACT SWITCH		
	SW 13	3404-000165	TACT SWITCH		
	SW 14	3404-000165	TACT SWITCH		
	SW 15	3404-000165	TACT SWITCH		
	SW 16	3404-000165	TACT SWITCH		
	SW 17	3404-000165	TACT SWITCH		
	SW 18	3404-000165	TACT SWITCH		
	SW 19	3404-000165	TACT SWITCH		
	SW 20	3404-000165	TACT SWITCH		
	SW 21	3404-000165	TACT SWITCH		
	SW 22	3404-000165	TACT SWITCH		
	SW 23	3404-000165	TACT SWITCH		
	SW 24	3404-000165	TACT SWITCH		
	SW 25	3404-000165	TACT SWITCH		
	SW 27	3404-000165	TACT SWITCH		
	SW 28	3404-000165	TACT SWITCH		
	SW 29	3404-000165	TACT SWITCH		
	SW 30	3404-000165	TACT SWITCH		
	SW 31	3404-000165	TACT SWITCH		
	SW 32	3404-000165	TACT SWITCH		
	SW 33	3404-000165	TACT SWITCH		
	SW 34	3404-000165	TACT SWITCH		
	UC 1	2401-000475	E CAPACITOR		
	UC 2	2401-000475	E CAPACITOR		
	UC 3	2201-000565	C CAPACITOR		
	UC 4	2201-000565	C CAPACITOR		
	UC 5	2201-000565	C CAPACITOR		
	UC 6	2401-000244	E CAPACITOR		
	UC 7	2201-000825	C CAPACITOR		
	UC 8	2201-000825	C CAPACITOR		
	UC 9	2201-000247	C CAPACITOR		
	UC 10	2201-000247	C CAPACITOR		
	UC 11	2401-000475	E CAPACITOR		
	UC 12	2401-000759	E CAPACITOR		
	UC 13	2401-001952	E CAPACITOR		
	UC 14	2202-000807	C CAPACITOR		
	UC 15	2202-000854	C CAPACITOR		
	UC 16	2201-000300	C CAPACITOR		
	UC 17	2202-000797	C CAPACITOR		
	UC 18	2202-000797	C CAPACITOR		
	UC 30	2401-001355	E CAPACITOR		
	UCW 1	3711-004420	CONNECTOR	TMC-D10P	
	UCW 2	3711-004424	CONNECTOR	TMC-D20P	
	UCW 3	3708-000454	CONNECTOR	22P	
	UCW 7	3711-000906	CONNECTOR		
	UCW 8	3708-000451	CONNECTOR	16P	
	UCW 9	AH39-00157A	LEAD CONNECTOR	3P	
	UCW8W	3809-001146	CABLE FLAT		
	UD 20	1N4002	DIODE		
	UD 21	1N4002	DIODE		

⚠	Item	Parts number	Parts name	Remarks	Area
	UD 22	1N4002	DIODE		
	UD 23	1N4148	GE DIODE		
	UD 24	1N4002	DIODE		
	UD 25	1N4148	GE DIODE		
	UD 26	1N4148	GE.DIODE		
	UD 27	1N4148	GE DIODE		
	UD 28	1N4148	GE DIODE		
	UD 29	1N4148	GE DIODE		
	UD 30	1N4002	DIODE		
	UIC 1	LC86P6548-5P31	IC(MICON-COMP)		
	UIC 2	NJU3711M	IC		
	ULD 1	LTL-1CHESS-UA	LED		
	UO 1	KSC945-YTA	TRANSISTOR		
	UO 2	KSC945-YTA	TRANSISTOR		
	UO 3	KSA928A	TRANSISTOR		
	UO 4	KSR1003TA	TRANSISTOR		
	UQ 5	KSR1003TA	TRANSISTOR		
	UO 6	KSA928A	TRANSISTOR		
	UO 7	KSA928A	TRANSISTOR		
	UO 8	KSR1003TA	TRANSISTOR		
	UQ 9	KSC945-YTA	TRANSISTOR		
	UO 10	KSR1003TA	TRANSISTOR		
	UO 15	KSR1003TA	TRANSISTOR		
	UR 1	2001-000258	C RESISTOR		
	UR 2	2001-000405	C RESISTOR	RN 1/8T 180-J	
	UR 3	2001-000241	C RESISTOR		
	UR 4	2001-000429	C RESISTOR		
	UR 5	2001-000429	C RESISTOR		
	UR 6	2001-000429	C RESISTOR		
	UR 7	2001-000734	C RESISTOR		
	UR 8	2001-000734	C RESISTOR		
	UR 9	2001-000734	C RESISTOR		
	UR 10	2001-000734	C RESISTOR		
	UR 11	2001-000734	C RESISTOR		
	UR 12	2001-000734	C RESISTOR		
	UR 13	2001-000734	C RESISTOR		
	UR 14	2001-000734	C RESISTOR		
	UR 15	2001-000734	C RESISTOR		
	UR 16	2001-000734	C RESISTOR		
	UR 17	2001-000734	C RESISTOR		
	UR 20	2001-000290	C RESISTOR		
	UR 21	2001-000290	C RESISTOR		
	UR 22	2001-000290	C RESISTOR		
	UR 23	2001-000290	C RESISTOR		
	UR 24	2001-000281	C RESISTOR		
	UR 25	2001-000429	C RESISTOR		
	UR 26	2001-000429	C RESISTOR		
	UR 27	2001-000429	C RESISTOR		
	UR 28	2001-000429	C RESISTOR		
	UR 29	2001-000429	C RESISTOR		
	UR 30	2001-000429	C RESISTOR		
	UR 31	2001-000591	C RESISTOR		
	UR 32	2001-000429	C RESISTOR		
	UR 33	2001-000429	C RESISTOR		
	UR 34	2001-000429	C RESISTOR		
	UR 35	2001-000429	C RESISTOR		
	UR 36	2001-000429	C RESISTOR		
	UR 37	2001-000429	C RESISTOR		
	UR 38	2001-000290	C RESISTOR		
	UR 39	2001-000290	C RESISTOR		
	UR 40	2001-000290	C RESISTOR		
	UR 41	2001-000290	C RESISTOR		
	UR 42	2001-000281	C RESISTOR		

■ **Electrical parts list(Front board)** **Block No. 03**

⚠	Item	Parts number	Parts name	Remarks	Area
	UR 43	2001-000281	C RESISTOR		
	UR 44	2001-000281	C RESISTOR		
	UR 45	2001-000281	C RESISTOR		
	UR 46	2001-000734	C RESISTOR		
	UR 47	2001-000449	C RESISTOR		
	UR 48	2001-000591	C RESISTOR		
	UR 49	2001-000449	C RESISTOR		
	UR 50	2001-000258	C RESISTOR		
	UR 51	2001-001178	C RESISTOR		
	UR 52	2001-000241	C RESISTOR		
	UR 53	2001-000429	C RESISTOR		
	UR 54	2001-000734	C RESISTOR		
	UR 55	2001-000591	C RESISTOR		
	UR 56	2001-000508	C RESISTOR		
	UR 57	2001-000793	C RESISTOR		
	UR 58	2001-000429	C RESISTOR		
	UR 59	2001-000241	C RESISTOR		
	UR 60	2001-000258	C RESISTOR		
	UR 61	2001-000273	C RESISTOR		
	UR 62	2001-000273	C RESISTOR		
	UR 63	2001-000273	C RESISTOR		
	UR 64	2001-000273	C RESISTOR		
	UR 65	2001-000429	C RESISTOR		
	UR 66	2001-000429	C RESISTOR		
	UR 67	2001-000449	C RESISTOR		
	UR 68	2001-000281	C RESISTOR		
	UR 69	2001-000281	C RESISTOR		
	UR 70	2001-000281	C RESISTOR		
	UR 71	2001-000429	C RESISTOR		
	UR 72	2001-000522	C RESISTOR		
	UR 73	2001-000429	C RESISTOR		
	UR 74	2001-000429	C RESISTOR		
	UR 75	2001-000429	C RESISTOR		
	UR 76	2001-000429	C RESISTOR		
	UR 77	2001-000429	C RESISTOR		
	UR 78	2001-000429	C RESISTOR		
	UR 79	2001-000429	C RESISTOR		
	UR 80	2001-000290	C RESISTOR		
	UR 81	2001-000290	C RESISTOR		
	UR 82	2001-000429	C RESISTOR		
	UR 83	2001-000273	C RESISTOR		
	UR 84	2001-000977	C RESISTOR		
	UR 85	2001-000411	C RESISTOR		
	UR 86	2001-000786	C RESISTOR		
	UR 87	2001-000290	C RESISTOR		
	UR 88	2001-000613	C RESISTOR		
	UR 89	2001-000613	C RESISTOR		
	UR 90	2001-000613	C RESISTOR		
	UR 91	2001-001178	C RESISTOR		
	UR 92	2001-001178	C RESISTOR		
	UR 93	2001-000449	C RESISTOR		
	UR 94	2001-000591	C RESISTOR		
	UR 95	2001-000734	C RESISTOR		
	UR 96	2001-000977	C RESISTOR		
	UR 97	2001-000411	C RESISTOR		
	UR 99	2001-000522	C RESISTOR		
	UR201	2001-000273	C RESISTOR		
	UVR 1	3406-001047	ROTARY SWITCH		
	UVR 2	2103-000492	SEMI F.VR.		
	UX 1	2802-000181	CERAMIC RESONAT	6MHZ	
	UX 2	2801-001394	CRYSTAL-UNIT	32.768KHZ	
	UXR 1	2001-000850	C RESISTOR		
	UXR 2	2001-000295	C RESISTOR		

⚠	Item	Parts number	Parts name	Remarks	Area
	VFD	AH07-00016A	FL DISPLAY TUBE		
	VFDHL	AH61-00252A	HOLDER-VFD		

■ Electrical parts list(CD board)

Block No. 04

⚠	Item	Parts number	Parts name	Remarks	Area
	CW101	AH39-20025S	CONNECTOR		
	CW102	AH39-20561P	CONNECTOR		
	CW500	3711-000906	CONNECTOR		
	IC922	KB9223	IC	ASP	
	IC925	KA9258D	IC	MOTOR DRIVER	
	IC928	KS9286B	IC	DSP	
	NC 1	2203-000260	C CAPASITOR		
	NC 54	2401-001952	E CAPACITOR		
	NC100	2203-000892	C CAPACITOR		
	NC101	2203-000802	C CAPACITOR		
	NC102	2203-001551	C CAPASITOR		
	NC103	2203-000260	C CAPASITOR		
	NC104	2203-001537	C CAPACITOR		
	NC105	2401-000240	E CAPACITOR		
	NC106	2203-000892	C CAPACITOR		
	NC107	2203-000206	C CAPACITOR		
	NC108	2203-000206	C CAPACITOR		
	NC110	2203-000495	C CAPACITOR		
	NC111	2203-000802	C CAPACITOR		
	NC112	2203-000260	C CAPASITOR		
	NC113	2203-000260	C CAPASITOR		
	NC114	2401-000419	E CAPACITOR		
	NC115	2203-001137	C CAPACITOR		
	NC116	2203-000260	C CAPASITOR		
	NC117	2203-000477	C CAPACITOR		
	NC118	2203-000787	C CAPACITOR		
	NC119	2203-000206	C CAPACITOR		
	NC120	2203-000206	C CAPACITOR		
	NC121	2203-000206	C CAPACITOR		
	NC122	2401-001952	E CAPACITOR		
	NC124	2401-001324	E CAPACITOR		
	NC125	2203-000802	C CAPACITOR		
	NC190	2203-000429	C CAPASITOR		
	NC200	2203-000979	C CAPASITOR		
	NC201	2203-001551	C CAPASITOR		
	NC202	2203-001619	C CAPACITOR		
	NC203	2203-001619	C CAPACITOR		
	NC204	2401-001324	E CAPACITOR		
	NC205	2203-000260	C CAPASITOR		
	NC300	2202-000796	C CAPACITOR		
	NC301	2401-000778	E CAPACITOR		
	NC400	2202-000243	C CAPACITOR		
	NC50L	2401-001952	E CAPACITOR		
	NC50R	2401-001952	E CAPACITOR		
	NC501	2401-000240	E CAPACITOR		
	NC502	2203-000260	C CAPASITOR		
	NC503	2203-000260	C CAPASITOR		
	NC504	2203-000260	C CAPASITOR		
	NC52L	2203-001537	C CAPACITOR		
	NC52R	2203-001537	C CAPACITOR		
	NC53L	2203-000260	C CAPASITOR		
	NC53R	2203-000260	C CAPASITOR		
	NC55L	2401-001952	E CAPACITOR		
	NC55R	2401-001952	E CAPACITOR		
	NC600	2203-000206	C CAPACITOR		
	NC601	2401-001895	E CAPACITOR		
	NC602	2203-000260	C CAPASITOR		
	NC603	2203-001537	C CAPACITOR		
	NC604	2203-000979	C CAPASITOR		
	NC700	2401-000778	E CAPACITOR		
	NC701	2401-000778	E CAPACITOR		
	NC702	2401-000240	E CAPACITOR		
	NC703	2401-001102	E CAPACITOR		

⚠	Item	Parts number	Parts name	Remarks	Area
	NC800	2203-000260	C CAPASITOR		
	NC804	2203-000260	C CAPASITOR		
	NC901	2203-000206	C CAPACITOR		
	NC903	2203-001537	C CAPACITOR		
	NC904	2401-000240	E CAPACITOR		
	NC905	2203-000260	C CAPASITOR		
	ND200	1N4148	GE DIODE		
	ND201	1N4148	GE DIODE		
	ND202	1N4148	GE DIODE		
	ND203	1N4148	GE DIODE		
	NIC05	KA78L05Z-TA	IC	POSI.ADJUST REG	
	NL100	2701-000114	INDUCTOR-AXIAL	10UH	
	NL101	2701-000111	INDUCTOR-AXIAL	100UH	
	NL102	2701-000111	INDUCTOR-AXIAL	100UH	
	NL105	3301-000325	CORE-FERRITE BE		
	NL300	3301-000297	CORE-FERRITE		
	NL301	3301-000297	CORE-FERRITE		
	NL302	3301-000297	CORE-FERRITE		
	NR 1	2001-000429	C RESISTOR		
	NR 2	2001-000429	C RESISTOR		
	NR 3	2001-000429	C RESISTOR		
	NR 4	2007-000468	CHIP RESISTOR		
	NR 5	2007-000468	CHIP RESISTOR		
	NR 6	2007-000468	CHIP RESISTOR		
	NR 7	2007-000468	CHIP RESISTOR		
	NR 8	2001-000429	C RESISTOR		
	NR 10	2007-000468	CHIP RESISTOR		
	NR 11	2007-000468	CHIP RESISTOR		
	NR 12	2007-000468	CHIP RESISTOR		
	NR 13	2007-000395	CHIP RESISTOR		
	NR100	2007-000355	CHIP RESISTOR		
	NR101	2007-000593	CHIP RESISTOR		
	NR103	2007-000395	CHIP RESISTOR		
	NR104	2007-000338	CHIP RESISTOR		
	NR105	2007-000830	CHIP RESISTOR		
	NR106	2001-000319	C RESISTOR		
	NR107	2007-000338	CHIP RESISTOR		
	NR108	2007-000941	CHIP RESISTOR		
	NR109	2007-000282	CHIP RESISTOR		
	NR111	2007-000941	CHIP RESISTOR		
	NR112	2007-001039	CHIP RESISTOR		
	NR113	2001-000977	C RESISTOR		
	NR114	2007-000477	CHIP RESISTOR		
	NR115	2007-000444	CHIP RESISTOR		
	NR116	2007-001195	CHIP RESISTOR		
	NR117	2007-000898	CHIP RESISTOR		
	NR119	2007-000395	CHIP RESISTOR		
	NR120	2007-000355	CHIP RESISTOR		
	NR121	2007-000355	CHIP RESISTOR		
	NR200	2007-000653	CHIP RESISTOR		
	NR201	2007-000686	CHIP RESISTOR		
	NR202	2007-000686	CHIP RESISTOR		
	NR203	2007-000282	CHIP RESISTOR		
	NR204	2007-000355	CHIP RESISTOR		
	NR300	2007-000282	CHIP RESISTOR		
	NR400	2007-000409	CHIP RESISTOR		
	NR50L	2007-000586	CHIP RESISTOR		
	NR50R	2007-000586	CHIP RESISTOR		
	NR52L	2007-000653	CHIP RESISTOR		
	NR52R	2007-000653	CHIP RESISTOR		
	NR53L	2007-000872	CHIP RESISTOR		
	NR53R	2007-000872	CHIP RESISTOR		
	NR54L	2007-000468	CHIP RESISTOR		

■ Electrical parts list(CD board)

Block No. 04

⚠	Item	Parts number	Parts name	Remarks	Area
	NR54R	2007-000468	CHIP RESISTOR		
	NR55L	2007-000872	CHIP RESISTOR		
	NR55R	2007-000872	CHIP RESISTOR		
	NR555	2008-000140	C RESISTOR		
	NR57L	2007-000282	CHIP RESISTOR		
	NR57R	2007-000282	CHIP RESISTOR		
	NR602	2007-000300	CHIP RESISTOR		
	NR603	2007-000300	CHIP RESISTOR		
	NR604	2007-000468	CHIP RESISTOR		
	NR606	2007-000282	CHIP RESISTOR		
	NR804	2007-000468	CHIP RESISTOR		
	NR994	2007-001208	CHIP RESISTOR		
	NR995	2007-000830	CHIP RESISTOR		
	NR996	2007-000830	CHIP RESISTOR		
	NR997	2007-000830	CHIP RESISTOR		
	NR998	2007-000830	CHIP RESISTOR		
	NR999	2007-001208	CHIP RESISTOR		
	Q1501	KSA928A	SI.TRANSISTOR		
	O1502	KSA812	TRANSISTOR		
	SC 1	2203-000260	C CAPASITOR		
	SC 2	2203-000260	C CAPASITOR		
	SC 5	2401-000795	E CAPACITOR		
	SC 6	2203-000260	C CAPASITOR		
	SC 14	2401-000240	E CAPACITOR		
	SCO 4	KA78L05Z-TA	IC	POSI.ADJUST REG	
	SCW 1	3708-001438	CONNECTOR	22P	
	SCW 5	3708-001131	CONNECTOR	5P	
	SCW 7	3711-003379	CONNECTOR		
	SIC 1	KA3082	IC	MOTOR DRIVER	
	SIC 2	KA3082	IC	MOTOR DRIVER	
	SL 1	2701-000179	INDUCTOR-AXIAL	33UH	
	SR 1	2001-000027	C RESISTOR		
	SR 2	2007-000872	CHIP RESISTOR		
	SR 3	2007-000468	CHIP RESISTOR		
	SR 4	2007-000468	CHIP RESISTOR		
	SZD 1	UZ4.7BM	ZENER DIODE	4.7V	
	SZD 2	UZ6.2BSB	ZENER DIODE	6.2V	
	WCW 1	3708-001252	CONNECTOR	16P	
	XF100	2802-000211	CER.RESONATOR	16.93MHZ	

■ Electrical parts list(Mic / Headphone board)

Block No. 05

⚠	Item	Parts number	Parts name	Remarks	Area
	HC 1	2202-000796	C CAPACITOR		
	HC 2	2202-000796	C CAPACITOR		
	HC 3	2202-000263	C CAPACITOR		
	HC 4	2202-000263	C CAPACITOR		
	HCW 1	3711-001009	CONNECTOR		
	HL 1	2701-000111	INDUCTOR-AXIAL		
	HL 2	2701-000111	INDUCTOR-AXIAL		
	HR 1	2001-001178	C RESISTOR		
	HR 2	2001-001178	C RESISTOR		
	JACK1	3722-000363	JACK PHONE		

Packing materials and accessories parts list

Block No. M 5 M M
Block No. M 6 M M

Version:
B.E.EN.EV

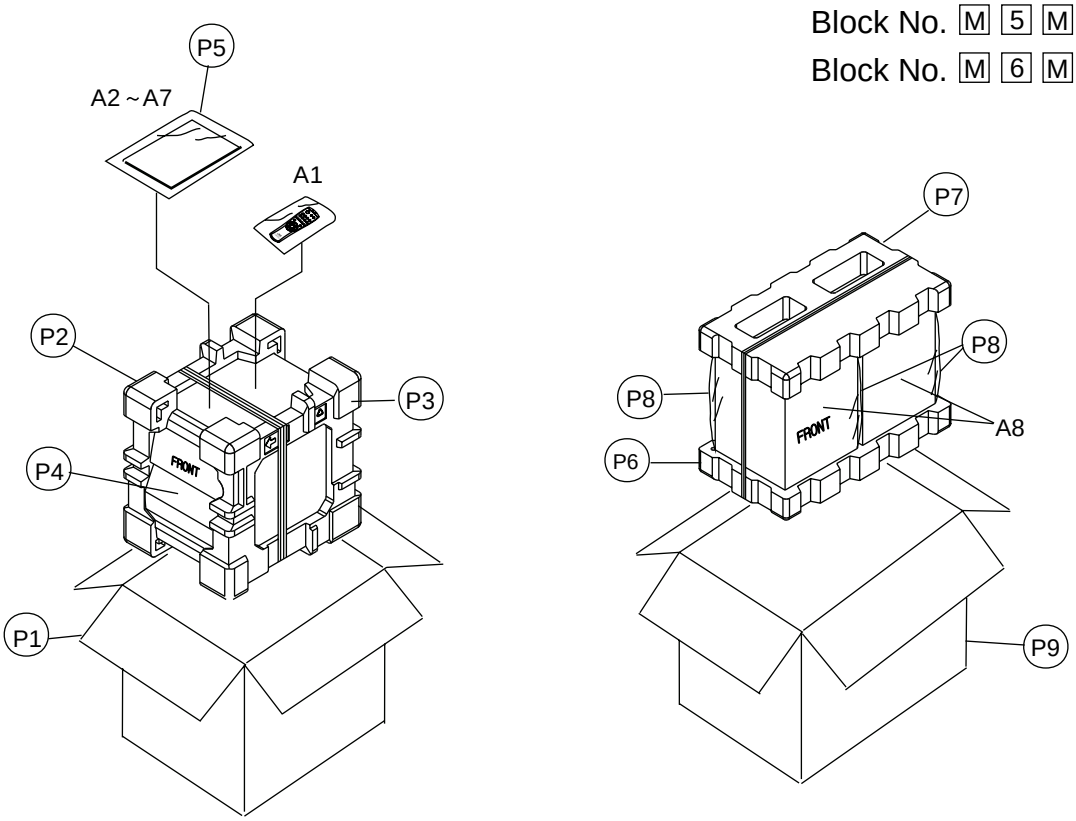

Version:
EE

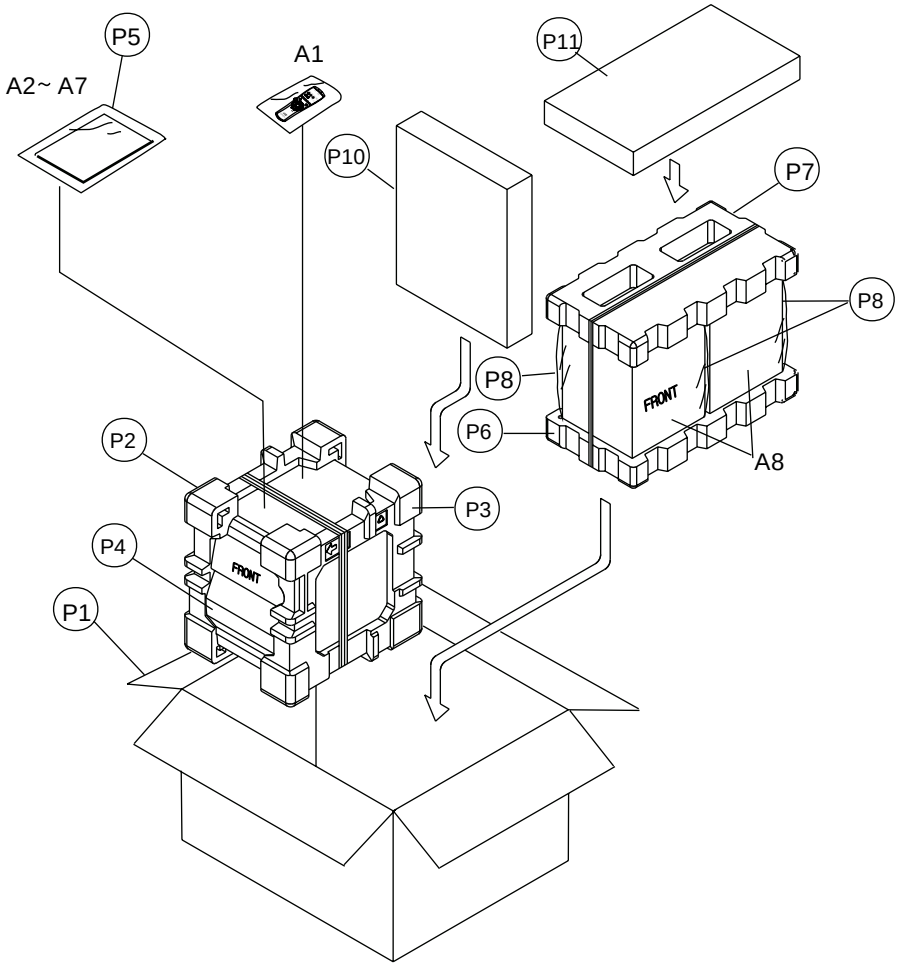

■ Parts list(Packing)

Block No. M5MM

⚠	Item	Parts number	Parts name	Q'ty	Description	Area
	P 1	AH69-00164A	CARTON	1		E B EN
		AH69-00164A	CARTON	1		EV
		AH69-00180C	MASTER CARTON	1		EE
	P 2	AH69-00152A	CUSHION-L	1		
	P 3	AH69-00153A	CUSHION-R	1		
	P 4	AH69-30012T	POLY BAG	1	SET	
	P 5	QPA02503503P	POLY BAG	1	INSTRUCTIONS	
	P 6	AH81-00243M	CUSHION-BOTTOM	1	SPEAKER	
	P 7	AH81-00243L	CUSHION-TOP	1	SPEAKER	
	P 8	AH81-00243P	POLY BAG	2	SPEAKER	
	P 9	AH81-00243N	CARTON	1	SPEAKER	E B EN EV
	P 10	AH69-00185A	PACKING PAD	1		EE
	P 11	AH69-00185B	PACKING PAD	1		EE

■ Parts list(Accessories)

Block No. M6MM

⚠	Item	Parts number	Parts name	Q'ty	Description	Area
	A 1	AH59-00044B	REMOTE-CONTROL	1	22KEY	
	A 2	AH68-00337D	INSTRUCTIONS	1	ENG	B
		AH68-00337E	INSTRUCTIONS	1	ENG GER FRE DUT SPA ITA	E
		AH68-00337F	INSTRUCTIONS	1	SWE FIN DAN GER FRE DUT	EN
		AH68-00337G	INSTRUCTIONS	1	CZE ENG HUN POL	EV
		AH68-00337K	INSTRUCTIONS	1	RUS	EE
		AH81-00243S	INSTRUCTIONS	1	(FOR SPEAKER)	B E EN EV
			INSTRUCTIONS	1	ENG FRE GER ITA	
			INSTRUCTIONS	1	DUT SPA DAN FIN	
			INSTRUCTIONS	1	HUN CZE POL SWE	
	A 3	AH68-00415D	GUARANTEE CARD	1		B E EN
	A 4	BT-54008-2	WARRANTY CARD	1	SPEACIAL BUYER OF E	E
		BT-54012-1	WARRANTY CARD	1		EV EE
	A 5	QAL0014-001	LOOP ANTENNA	1	AM	
	A 6	EWP503-001	ANTENNA WIRE	1	FM	
	A 7		BATTERY	2		
	A 8	MXJ100K-SPBOX	SPEAKER BOX	2		

VICTOR COMPANY OF JAPAN, LIMITED
AUDIO & COMMUNICATION BUSINESS DIVISION
PERSONAL & MOBILE NETWORK B.U. 10-1,1Chome,Ohwatari-machi,maebashi-city,371-8543,Japan

No.20854

Printed in Japan
200008(V)